https://faelix.link/geant1183

5G FWA IN ORKNEY: BUILD AND OPERATION

MAREK ISALSKI, FAELIX
GREG WHITTON, CLOUDNET

About Marek

- CTO @FAELIX – https://faelix.net/
  - Small consultancy helping alt-nets build and scale
- PC @uknof – https://uknof.uk/
- Crew @net_mcr – https://www.netmcr.uk/
- Tweet @maznu — or our mascot @NetworkMoose

- Joined by **Greg Whitton**, of **CloudNet** in Orkney, for Q&A / discussion

5G NEW THINKING

5GNT: Orcadian Inception

- UK Government, Cisco, University of Strathclyde
  - Aims to produce a "toolkit" of how to build rural 5G networks; numerous "testbeds" running for ~6mo
- CloudNet (local WISP) + Faroes Telecom — testbed
  - NetEngs experience of previous 4G projects
    - And some L2 to L3 "growing pains" to resolve
    - Issues common in organically-grown WISPs

Project/Vendor "Interop"

- 5GNT testbed was short-term project
  - Timescales, reporting, multi-stakeholder
  - WISP is "local telco"; has ongoing responsibilities

- 5GNT project has $large_vendor involved
  - $large_vendor has preference of NOS/hardware
  - WISP bears most of cap-ex, all long-term op-ex

Vendor Selection

- **University of Strathclyde** had experience/partners:
  - **Cisco** — core (…but ended up **Open5GS**)
  - **Open5GS** — on-WISP user-plane function
  - **Amarisoft** — eNodeB/gNodeB (100MHz 4x4 TDD)
  - **AW2S** — 4G+5G radios (e.g. 2x2 MIMO Blackhawk)
  - **Alpha Wireless** — antenna (e.g. AW3463)
  - UEs — **Sunwave**, **Zyxel**, **Apple** iPad, **Android** tablet

Vendor Selection

- **CloudNet** had preferences too:
  - Knows the area and their challenges
  - Knows their budget
  - Will be responsible for operations long-term
  - Will have to manage supply-chain and sparing
  - Sometimes you have to accept (and work around) sharp edges in customer's chosen NOS/hardware

Architecture Decision

- IPv6/IPv4 dualstack from the beginning ✓
- NOS has no IS-IS support
- Vendor's OSPF is a hot mess
- Vendor's iBGP with IPv6 is terrible
- Vendor's BGP next-hop ignores IGP metric

- Customer has preference — can we make it work?

Architecture Decision

- IPv6/IPv4 dualstack from the beginning
- NOS has no IS-IS support
- Vendor's OSPF is a hot mess
- Vendor's iBGP with IPv6 is terrible
- Vendor's BGP next-hop ignores IGP metric

- Customer has preference — can we make it work?

Architecture Decision

- IPv6/IPv4 dualstack from the beginning
- NOS has no IS-IS support
- Vendor's OSPF is a hot mess
- Vendor's iBGP with IPv6 is terrible
- Vendor's BGP next-hop ignores IGP metric

- Customer has preference — can we make it work?

Architecture Decision

- IPv6/IPv4 dualstack from the beginning
- NOS has no IS-IS support
- Vendor's OSPF is a hot mess
- Vendor's iBGP with IPv6 is terrible
- Vendor's BGP next-hop ignores IGP metric

- Customer has preference — can we make it work?

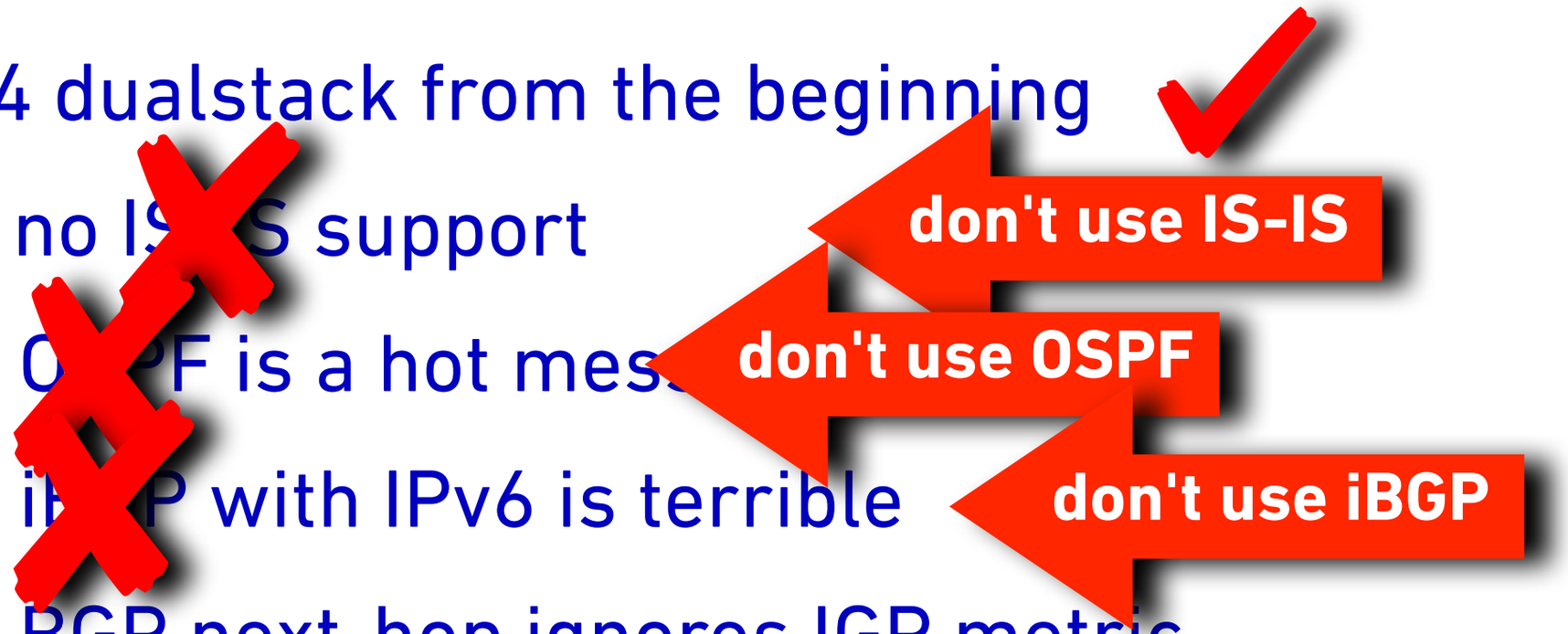

Architecture Decision

- IPv6/IPv4 dualstack from the beginning
- NOS has no IS-IS support
- Vendor's OSPF is a hot mess
- Vendor's iBGP with IPv6 is terrible
- Vendor's BGP next-hop ignores IGP metric

- Customer has preference — can we make it work?

don't use IS-IS

don't use OSPF

don't use iBGP

don't have IGP

Architecture Decision

- IPv6/IPv4 dualstack from
- NOS has no IS-IS sup
- Vendor's OSPF is a ho
- Vendor's iBGP with I
- Vendor's BGP next-hop i

- Customer has preference — can we make it work?

Architecture

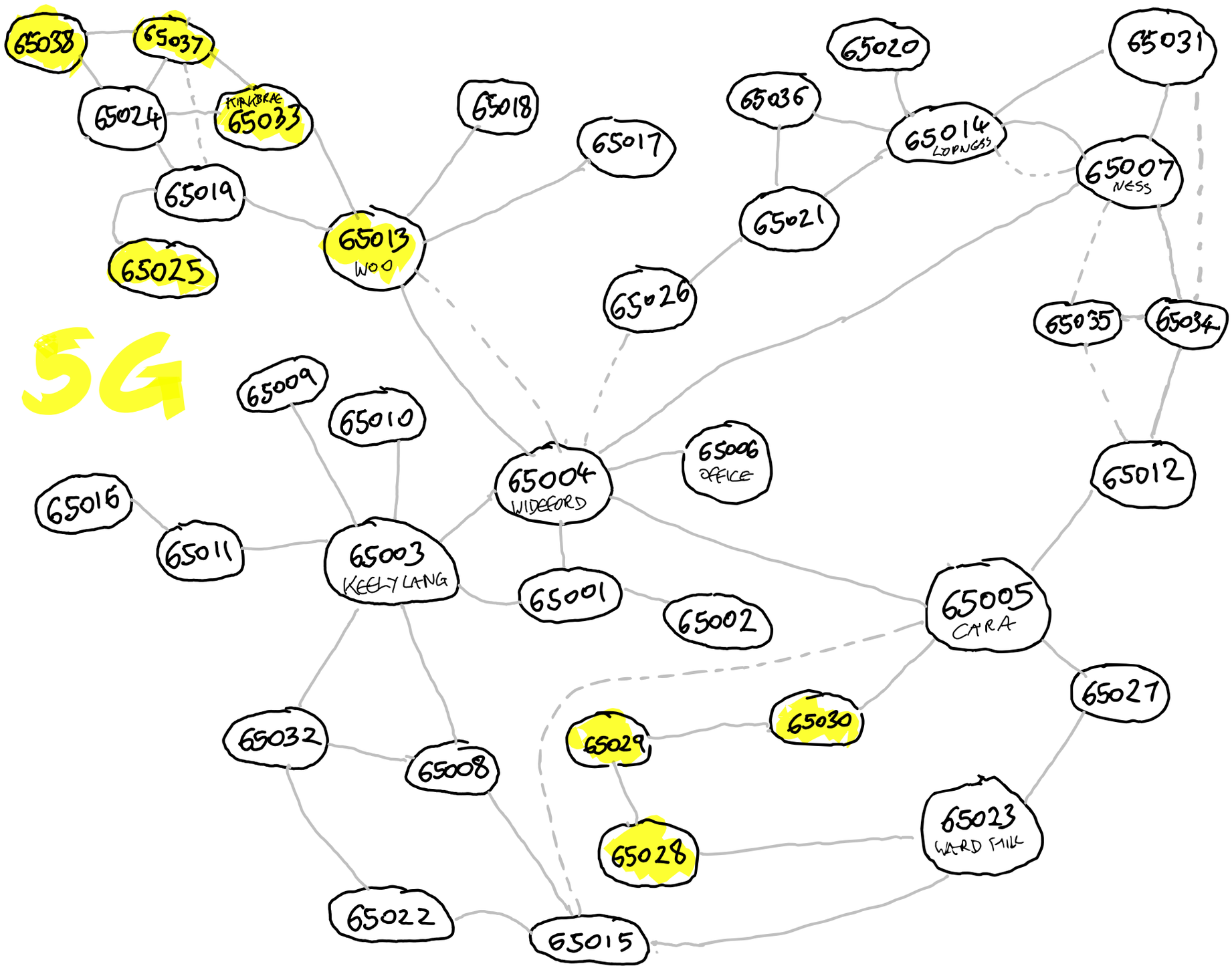

Uplinks / Backhaul

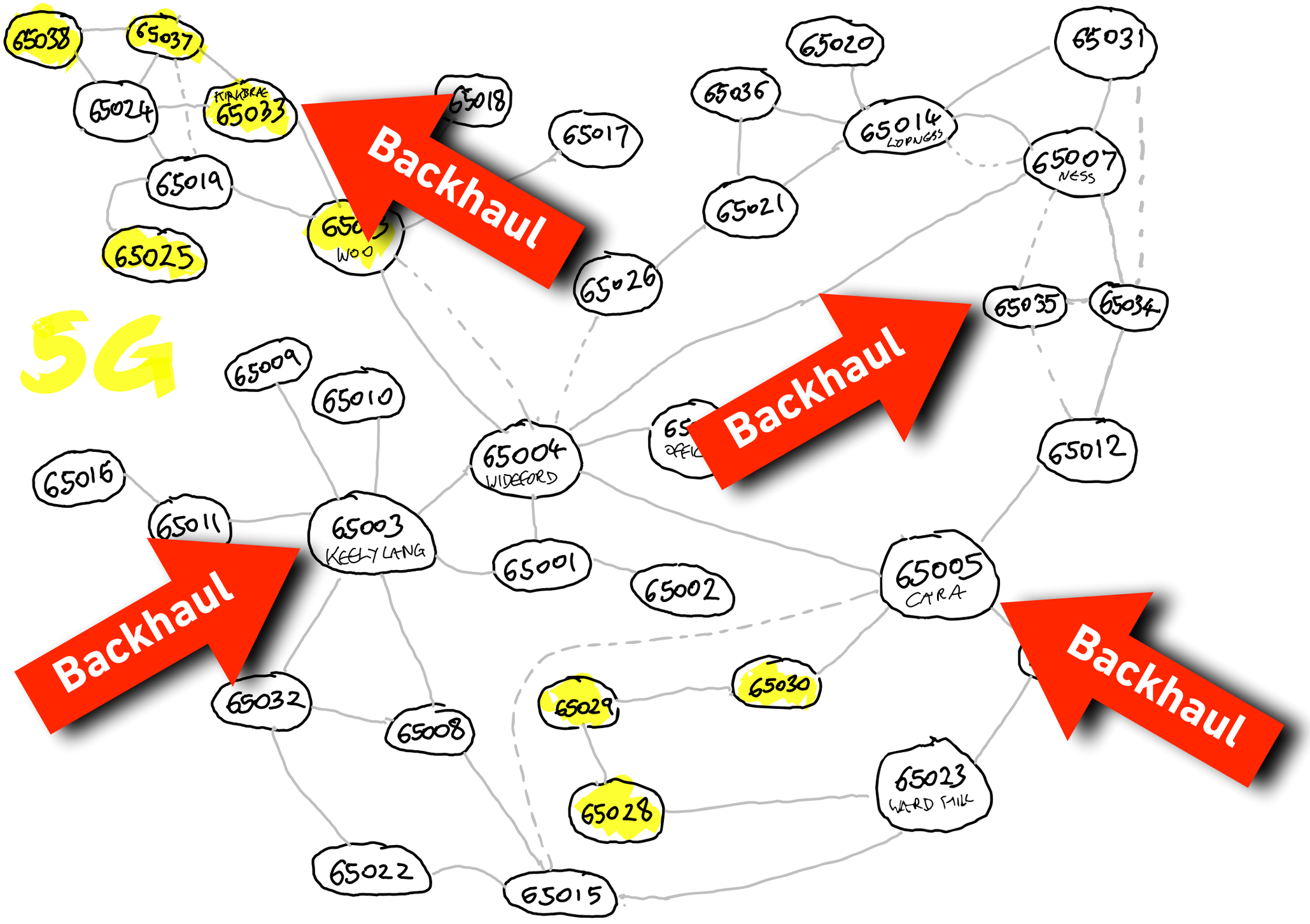

Future/Current Builds

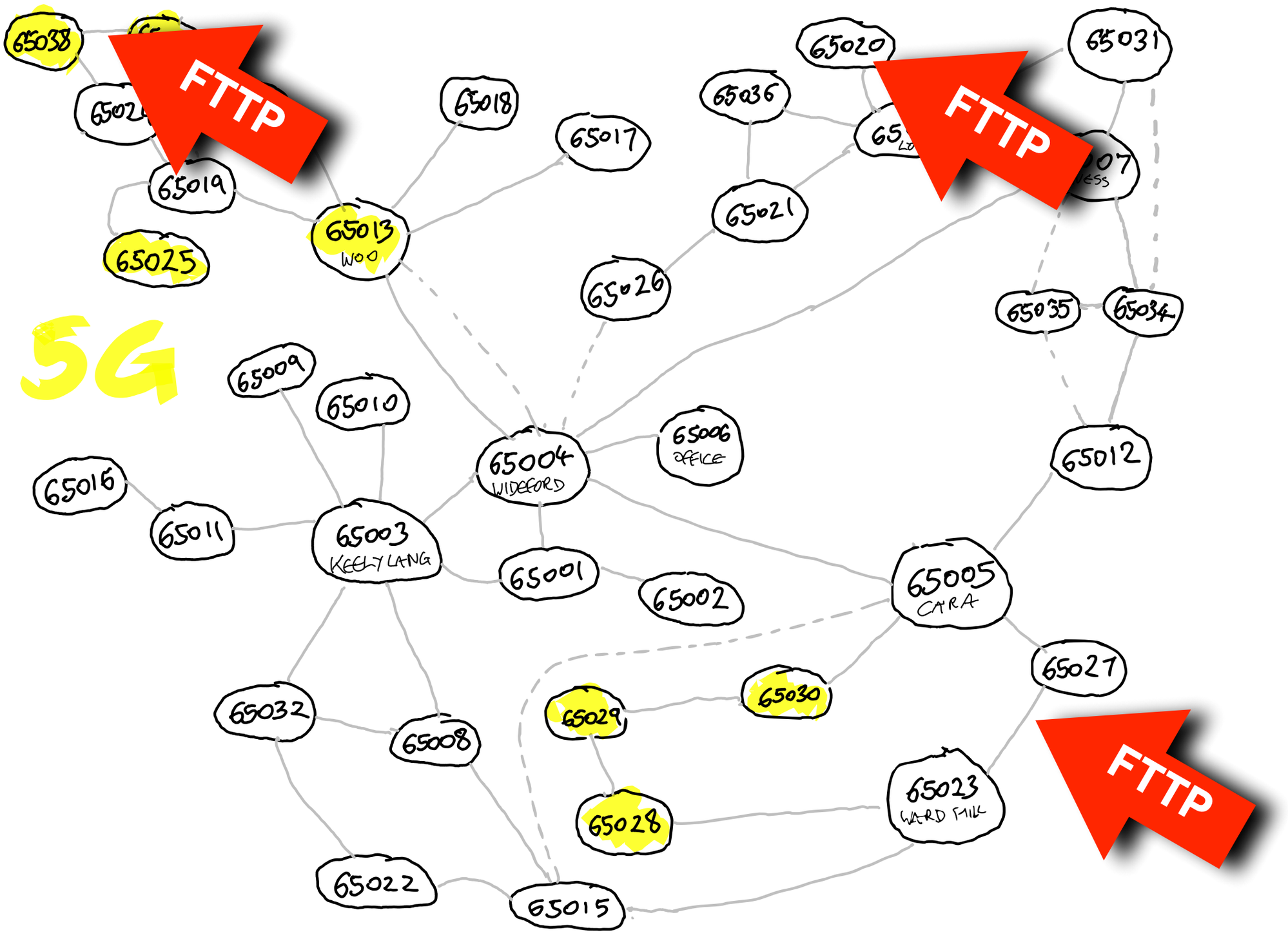

Entire Network in Netbox

Organization

Sites	38
Tenants	0

Inventory

Racks	4
Device Types	22
Devices	769

Power

Power Panels	0
Power Feeds	0

IPAM

VRFs	2
Aggregates	6
Prefixes	1044
IP Ranges	0
IP Addresses	2322
VLANs	734

Circuits

Providers	3
Circuits	388

Virtualization

Clusters	2
Virtual Machines	3

Connections

Cables	1114
Console	0
Interfaces	979
Power Connections	0

L2 to L3 Migration

- Architected / HLD in May 2021 (pen and paper!)
- Low-Level Design in June 2021 (NetBox)
- Template-automated in July 2021 (Python)

- August 2021: full BOM costed to the patch cable
- Deadline of October 2021 for first 5G customers

WHY ACCEPT THOSE NOS CONSTRAINTS?

Quadruple-Whammy

- Pandemic
  - Almost everything is harder, takes longer
- Brexit
  - Customs charges, import duty, returns to supplier
- Supply Chain
  - Not having e.g. PSU capacitors affects all vendors
- Orkney
  - Turns out that Orkney is Quite Far

0
50
100 mi
FAROE ISLANDS
Orkney
NORWAY
SWEDEN
ÅLAND ISLANDS
Oslo
Stockholm
Baltic Sea
North Sea
DENMARK
Copenhagen
UNITED KINGDOM
Dublin
Hamburg
Berlin

Swona 17m
John O' Groats 23½m
Duncansby Head 24m
Edinburgh 211m
Hunda 9m
St Margarets Hope
London 535m

How Far?

Face 11m
Edinburgh 211m
St Margarets Hope
London 535m

ICELAND
Labrador Sea
Thousands of Miles of Sea
UNITED KINGDOM
IRELAND
Birmingham
Celtic Sea
Bay of Biscay

WET AND WINDY

"On Orkney the rain can be vertical. Vertical upwards."

– Trevor, CloudNet Orkney

Typical High Site

Keeping Dry Inside

"On Orkney the rain can be vertical. Vertical upwards."

– Trevor, CloudNet Orkney

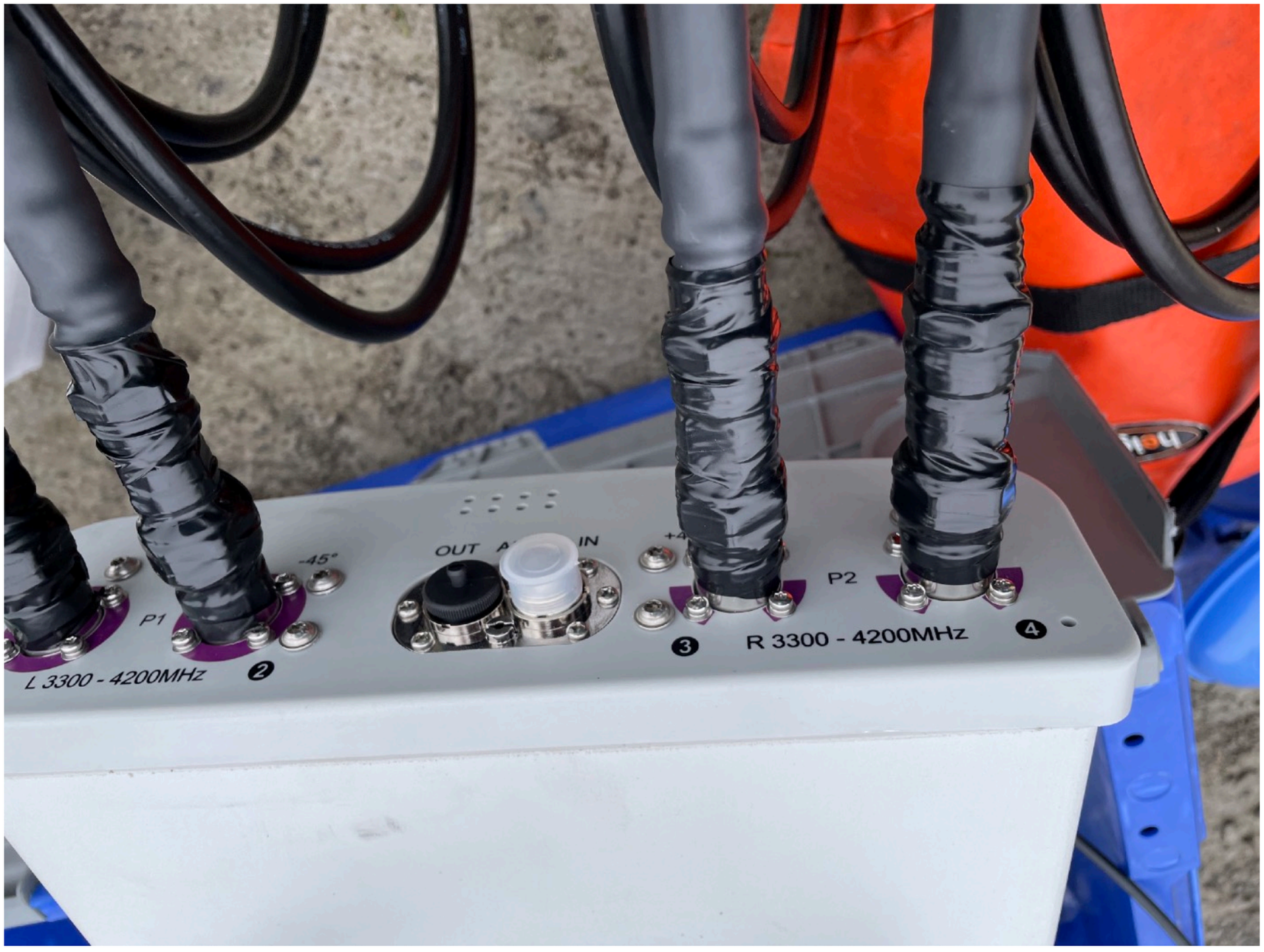
OUT
IN
P1
-45°
P2
L 3300 - 4200MHz
R 3300 - 4200MHz

Will Warranty Cover This?

Not All Vendors are Equal

- Warranty:
  - Is this hardware made for these environments?
  - How long would RMA replacement take to arrive?
  - Self-sparing was essential!

LOCAL vs REMOTE

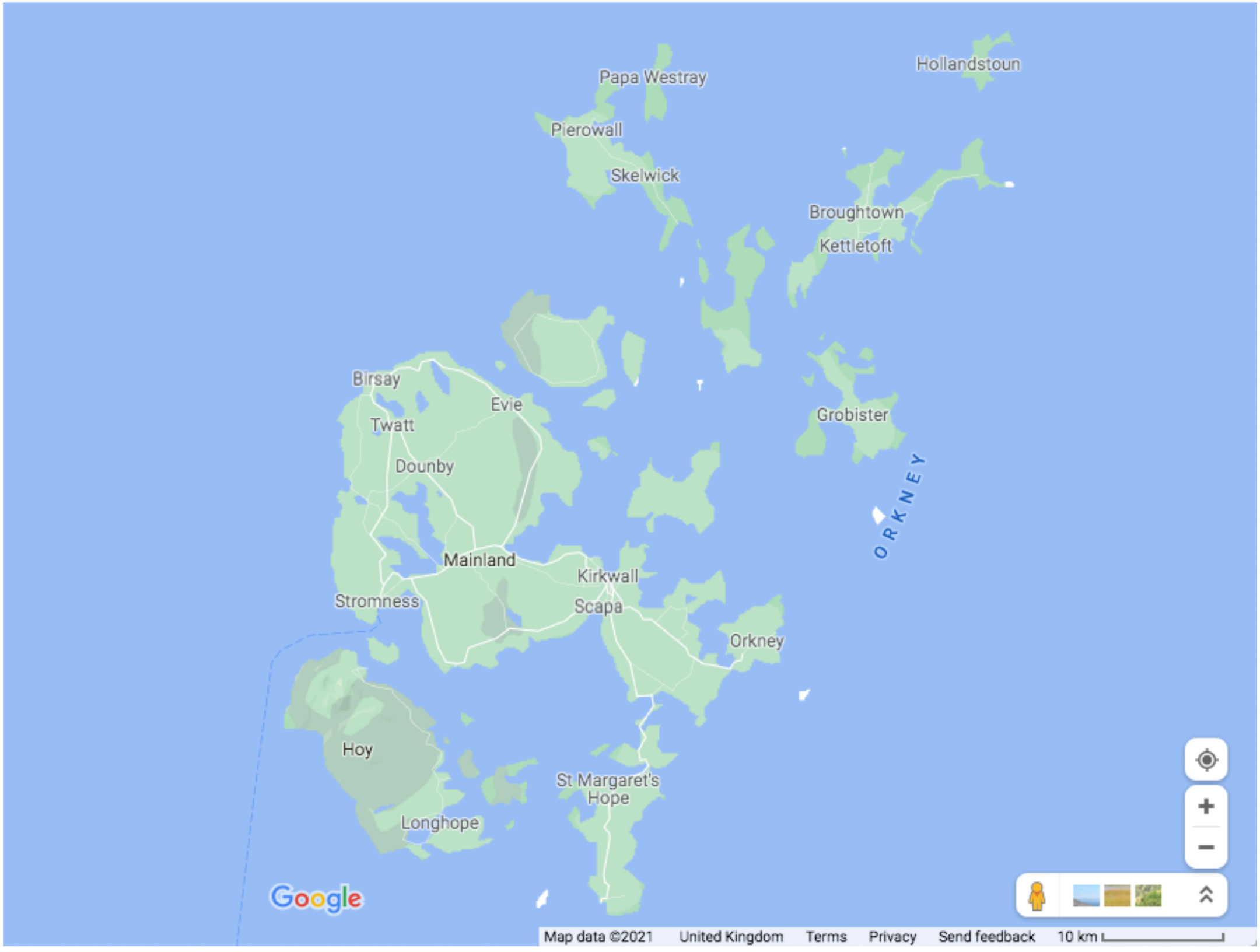
Papa Westray
Hollandstoun
Pierowall
Skelwick
Broughtown
Kettletoft
Birsay
Evie
Twatt
Grobister
Dounby
Mainland
Kirkwall
Stromness
Scapa
Orkney
Hoy
St Margaret's Hope
Longhope
ORKNEY
Google
Map data ©2021
United Kingdom
Terms
Privacy
Send feedback
10 km

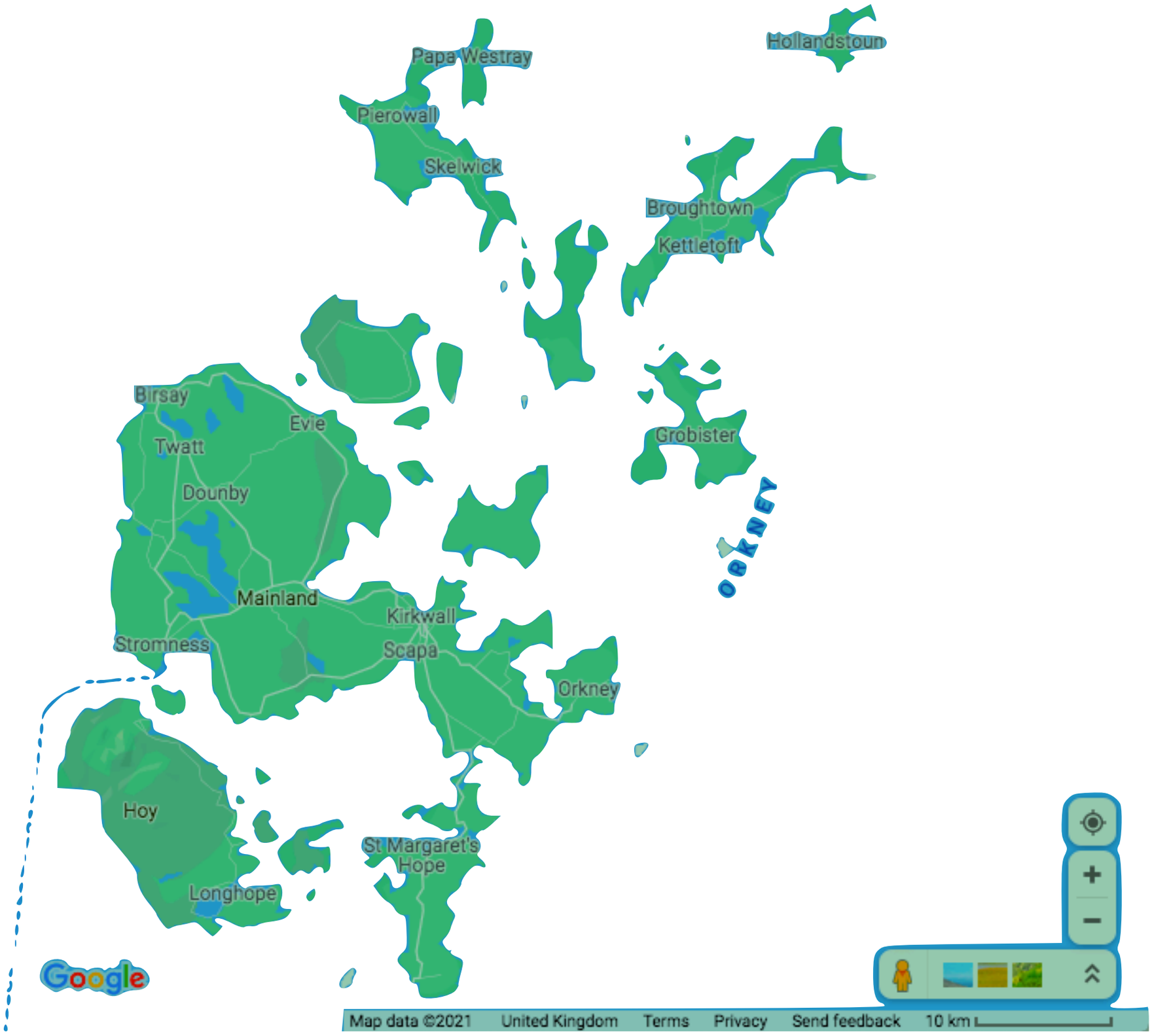
Papa Westray
Hollandstoun
Pierowall
Skelwick
Broughtown
Kettletoft
Birsay
Evie
Twatt
Grobister
Dounby
Orkney
Mainland
Kirkwall
Stromness
Scapa
Orkney
Hoy
St Margaret's Hope
Longhope
Google
Map data ©2021
United Kingdom
Terms
Privacy
Send feedback
10 km

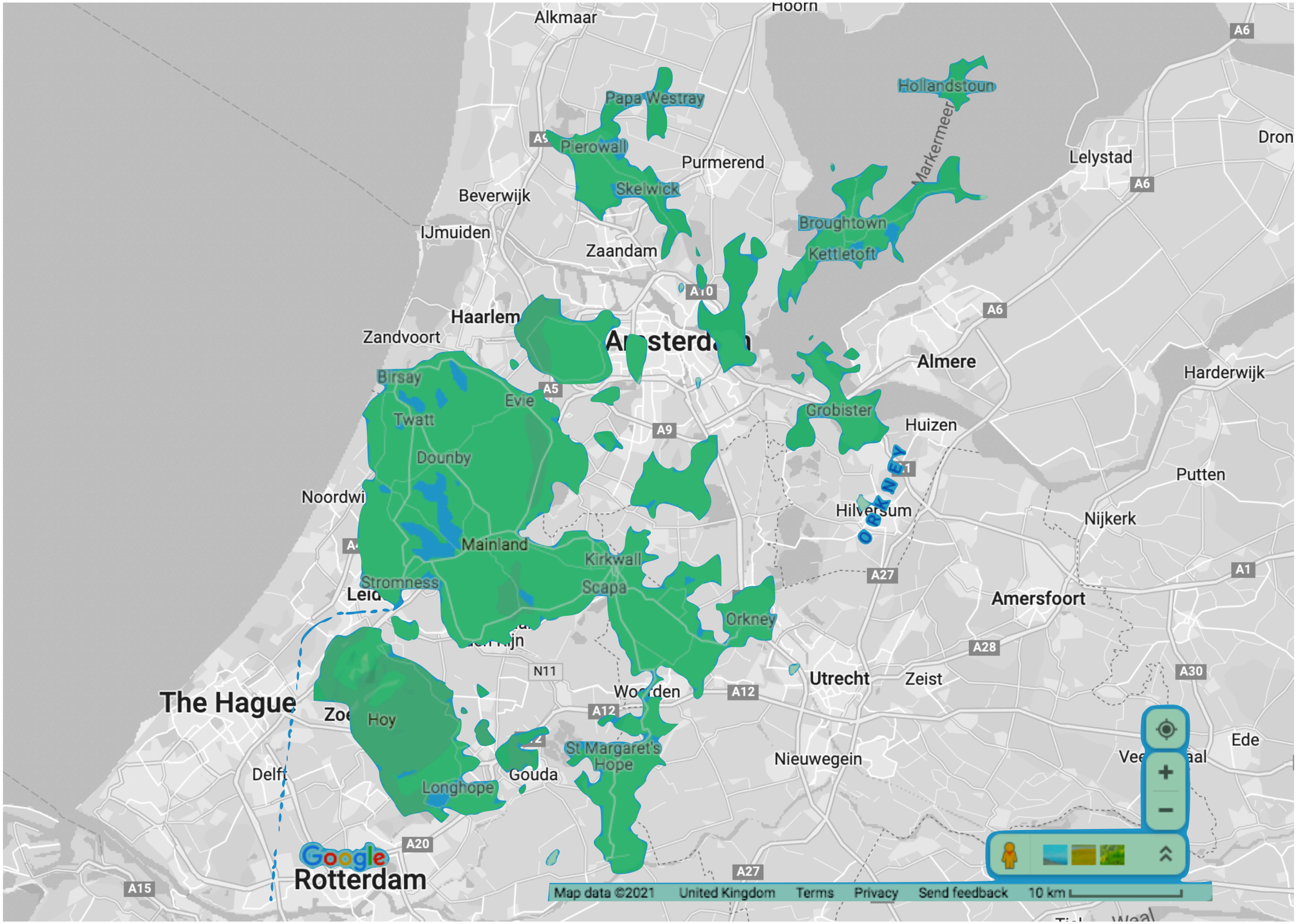
Alkmaar
Hoorn
A6
Hollandstoun
Papa Westray
Pierowall
Purmerend
Markermeer
Lelystad
Dron
A6
Beverwijk
Skelwick
IJmuiden
Broughtown
Kettletoft
Zaandam
A10
Haarlem
A6
Zandvoort
Amsterdam
Almere
Harderwijk
Birsay
A5
Evie
Twatt
Grobister
A9
Huizen
Dounby
Noordwi
Hilversum
Putten
Nijkerk
Mainland
Kirkwall
Stromness
Scapa
A27
A1
Amersfoort
Orkney
A28
N11
Utrecht
Zeist
A30
The Hague
Woerden
A12
A12
Hoy
St Margaret's Hope
Ede
Nieuwegein
Delft
Gouda
Longhope
A20
Google
Rotterdam
A27
A15
Map data ©2021
United Kingdom
Terms
Privacy
Send feedback
10 km

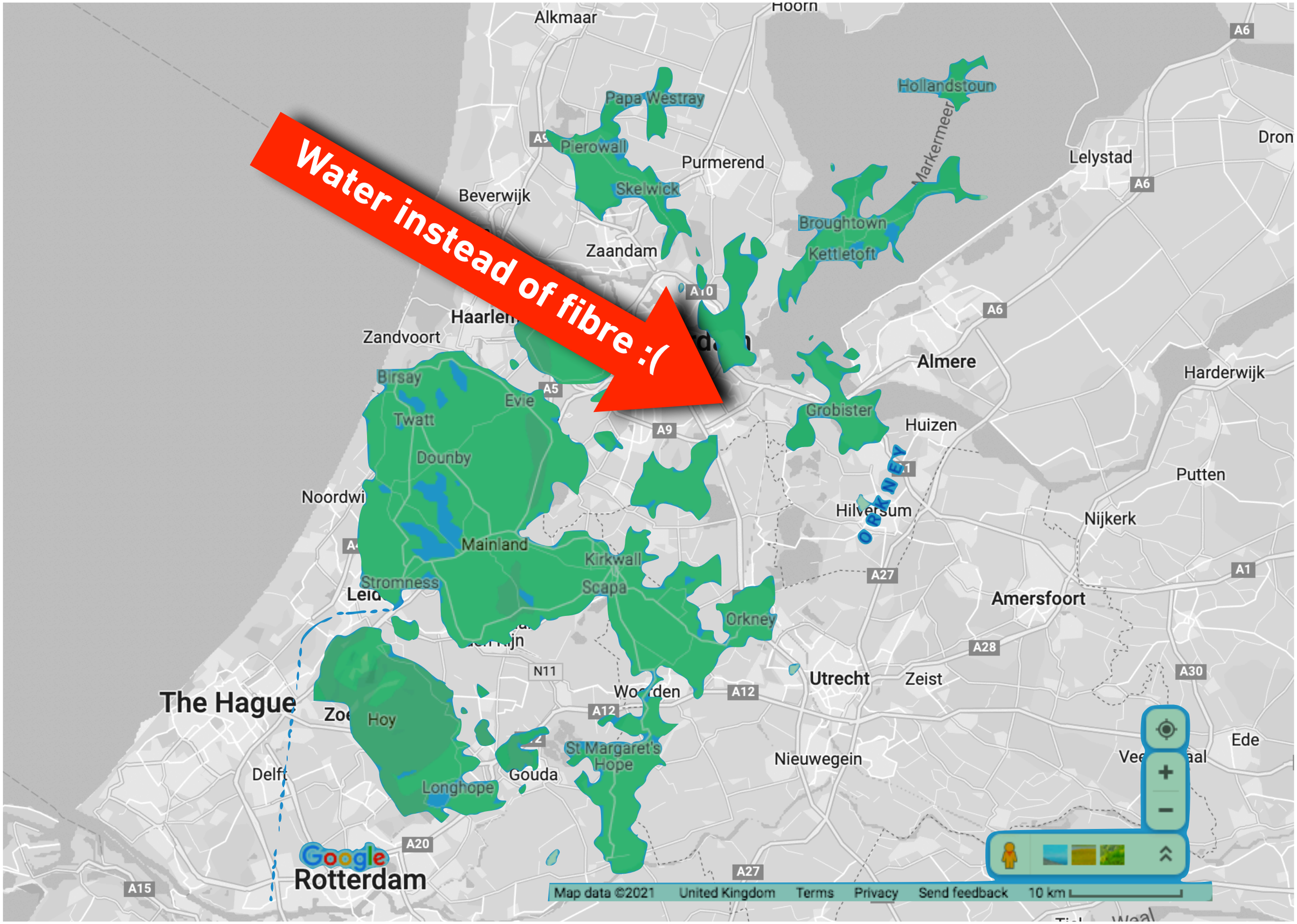
Water instead of fibre :(
Alkmaar
Hoorn
Papa Westray
Pierowall
Purmerend
Skelwick
Beverwijk
Zaandam
Hollandstoun
Markermeer
Broughtown
Kettletoft
Lelystad
Dron
A6
A10
A5
A9
Haarlem
Zandvoort
Birsay
Evie
Twatt
Dounby
Noordwi
Almere
Harderwijk
Grobister
Huizen
Hilversum
Putten
Nijkerk
Mainland
Kirkwall
Scapa
Stromness
Orkney
Amersfoort
A27
A28
A30
A1
A12
N11
Utrecht
Zeist
Woerden
The Hague
Hoy
St Margaret's Hope
Nieuwegein
Ede
Delft
Gouda
Longhope
A20
A15
Google
Rotterdam
Map data ©2021
United Kingdom
Terms
Privacy
Send feedback
10 km

Fibre 2021

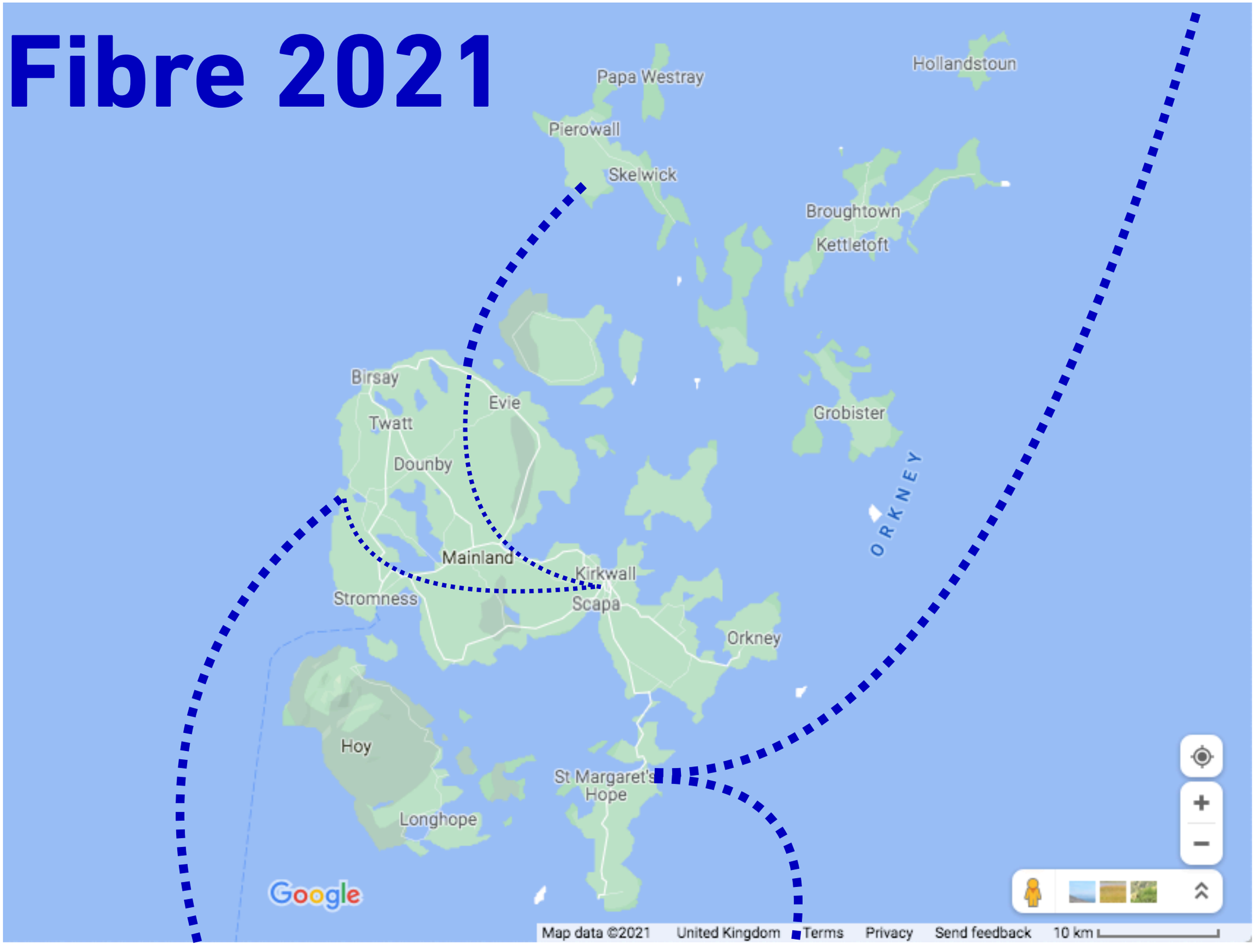
Papa Westray
Hollandstoun
Pierowall
Skelwick
Broughtown
Kettletoft
Birsay
Evie
Twatt
Grobister
Dounby
ORKNEY
Mainland
Kirkwall
Stromness
Scapa
Orkney
Hoy
St Margaret's Hope
Longhope
Google
Map data ©2021
United Kingdom
Terms
Privacy
Send feedback
10 km

SGNT-Project Quarters
Quarter
Months
Duration
1 to 3
May 20-Jul 20
4 to 6
Aug 20-Oct 20
7 to 9
Nov 20-Jan 21
10 to 12
Feb 21-Apr 21
13 to 15
May 21-Jul 21
16 to 18
Aug 21-Oct 21
19 to 21
Nov 21-Jan 22
22 to 23
Feb 22-Mar 22

5G Areas

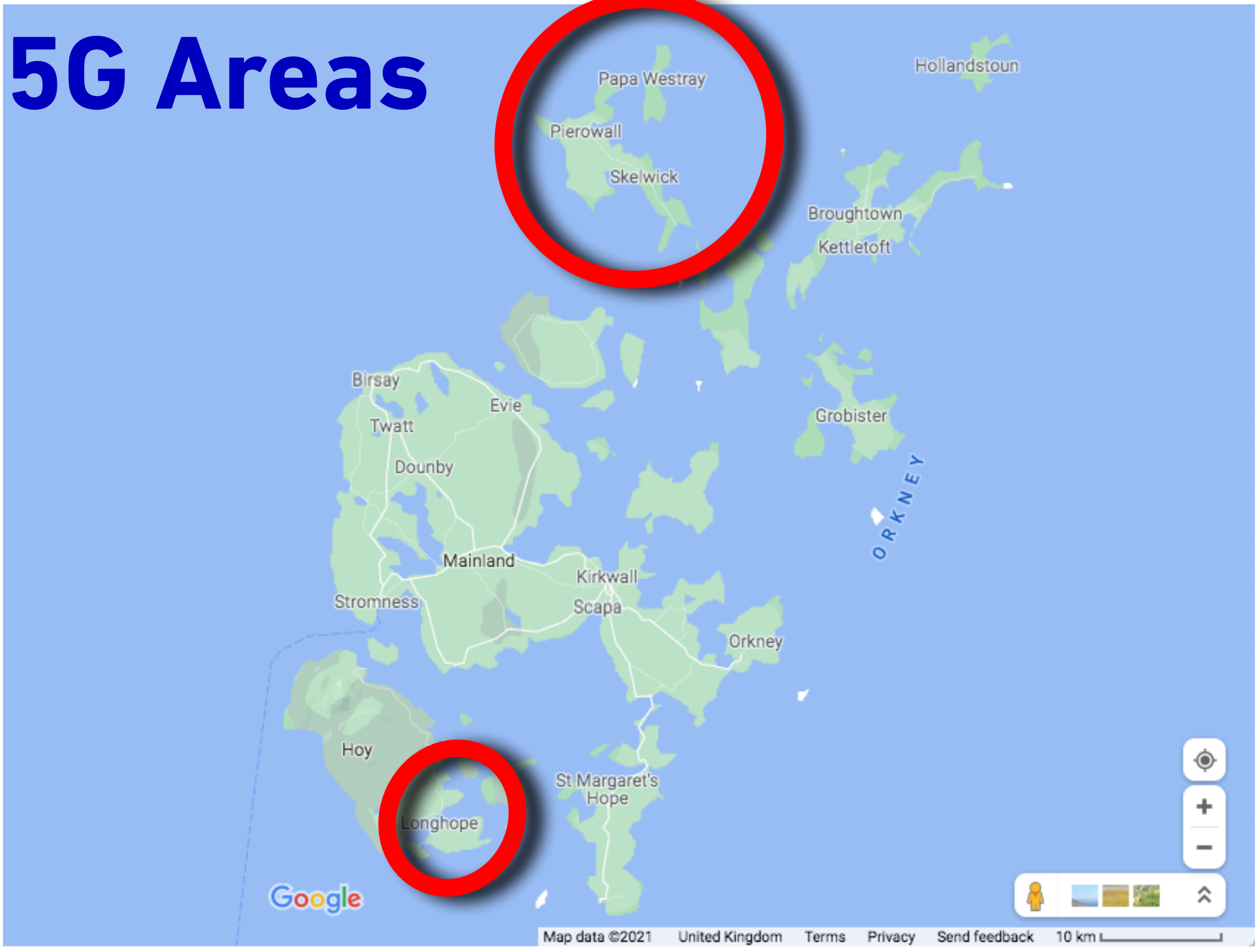
Papa Westray
Pierowall
Skelwick
Hollandstoun
Broughtown
Kettletoft
Birsay
Evie
Twatt
Dounby
Grobister
Mainland
Kirkwall
Stromness
Scapa
Orkney
Hoy
St Margaret's Hope
Longhope
ORKNEY
Google
Map data ©2021
United Kingdom
Terms
Privacy
Send feedback
10 km

Backbone

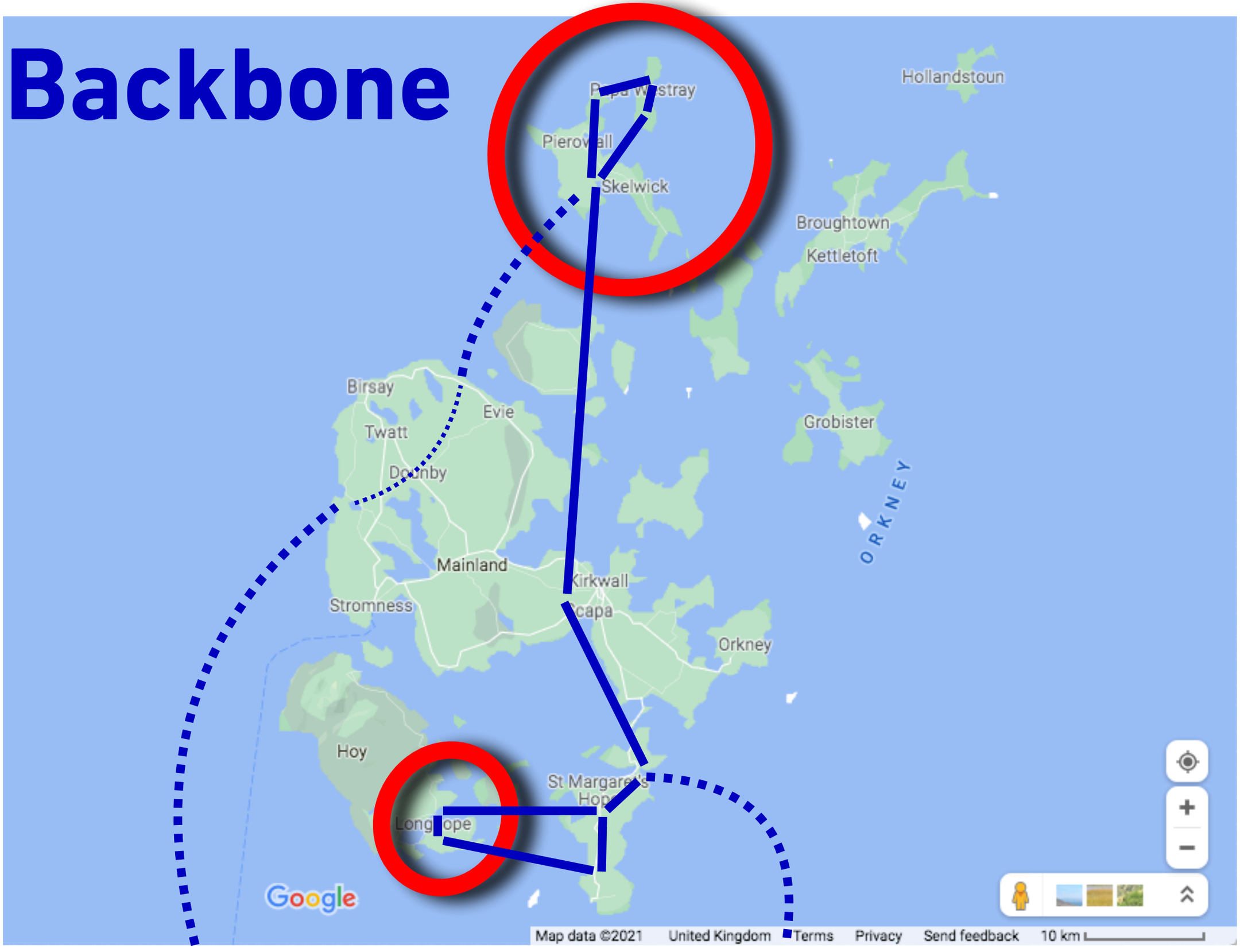
Hollandstoun
Skelwick
Broughtown
Kettletoft
Birsay
Evie
Twatt
Grobister
Mainland
Kirkwall
Stromness
Orkney
Hoy
Google
Map data ©2021
United Kingdom
Terms
Privacy
Send feedback
10 km

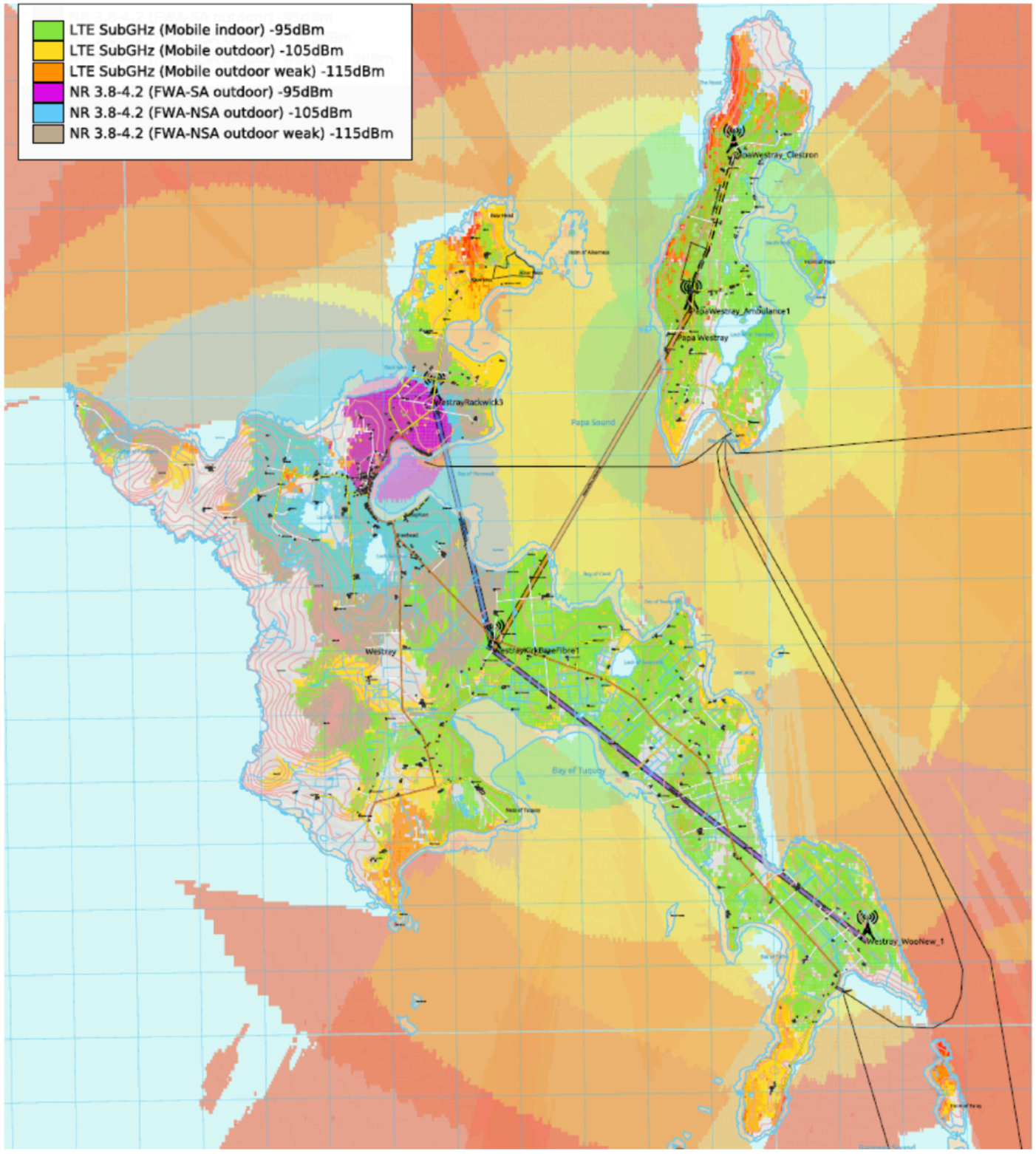

Combined 4G LTE + 5G NR coverage map, showing sites and backhaul links

High-Level Design

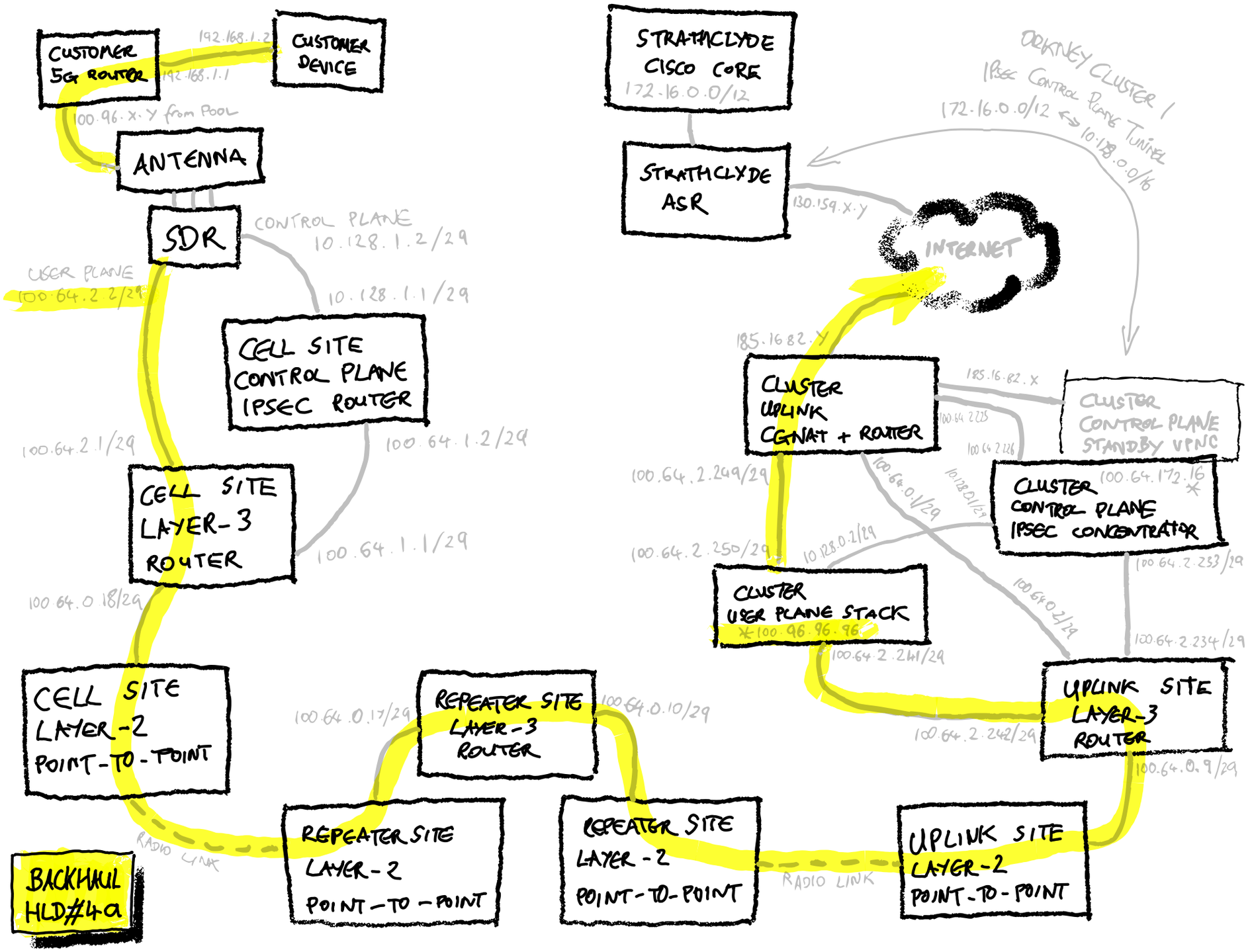

No Pets Allowed!

- Same equipment at every site
  - Easier for sparing
  - Easier for automation/configuration
- Same cabling at every site
  - Production-line process for pre-build
- But not every site is identical?
  - LLD is a component-based template
  - What moving parts do we need at this site?

Object Orientated + Mixins

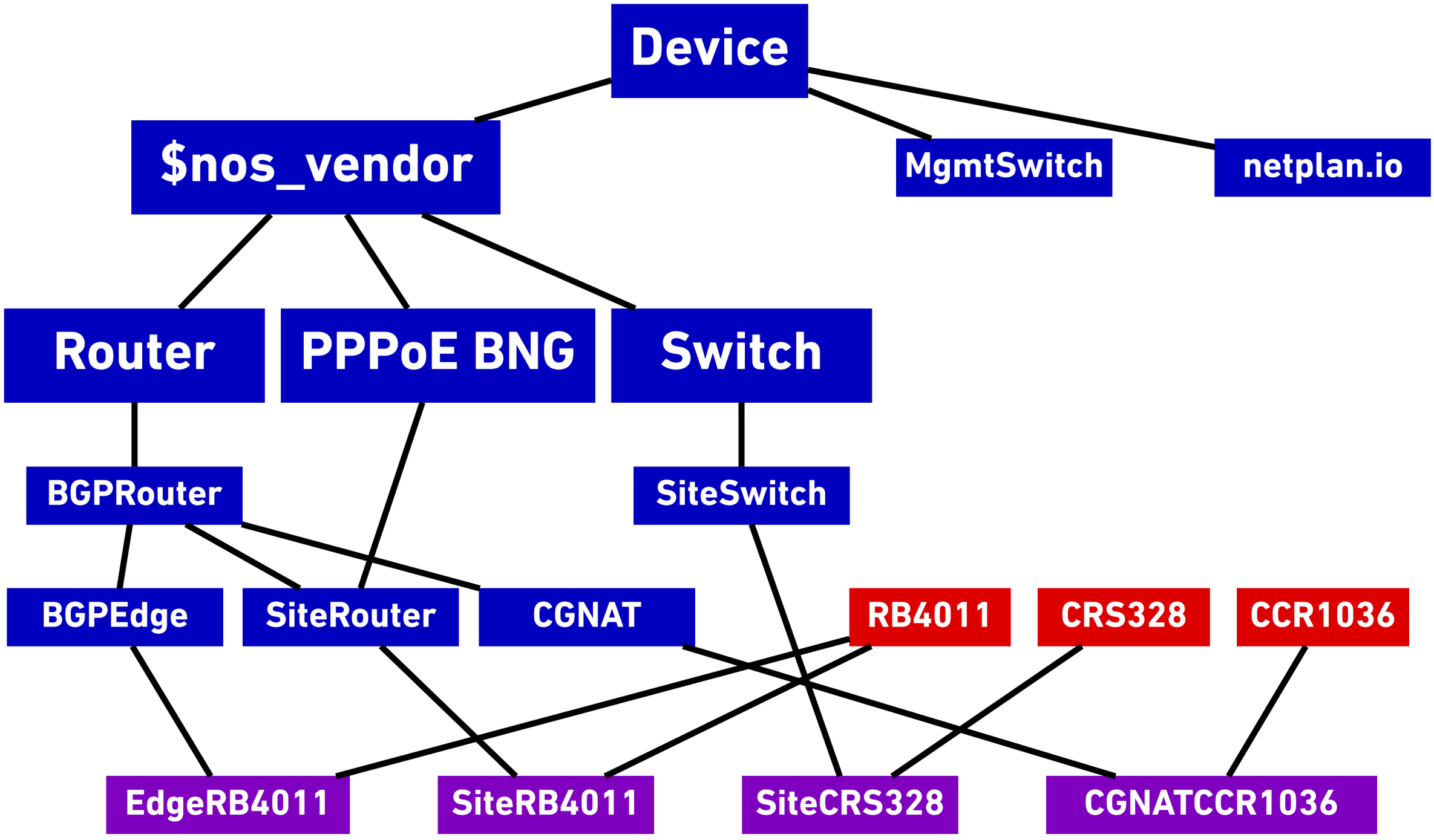

Object Orientated + Mixins

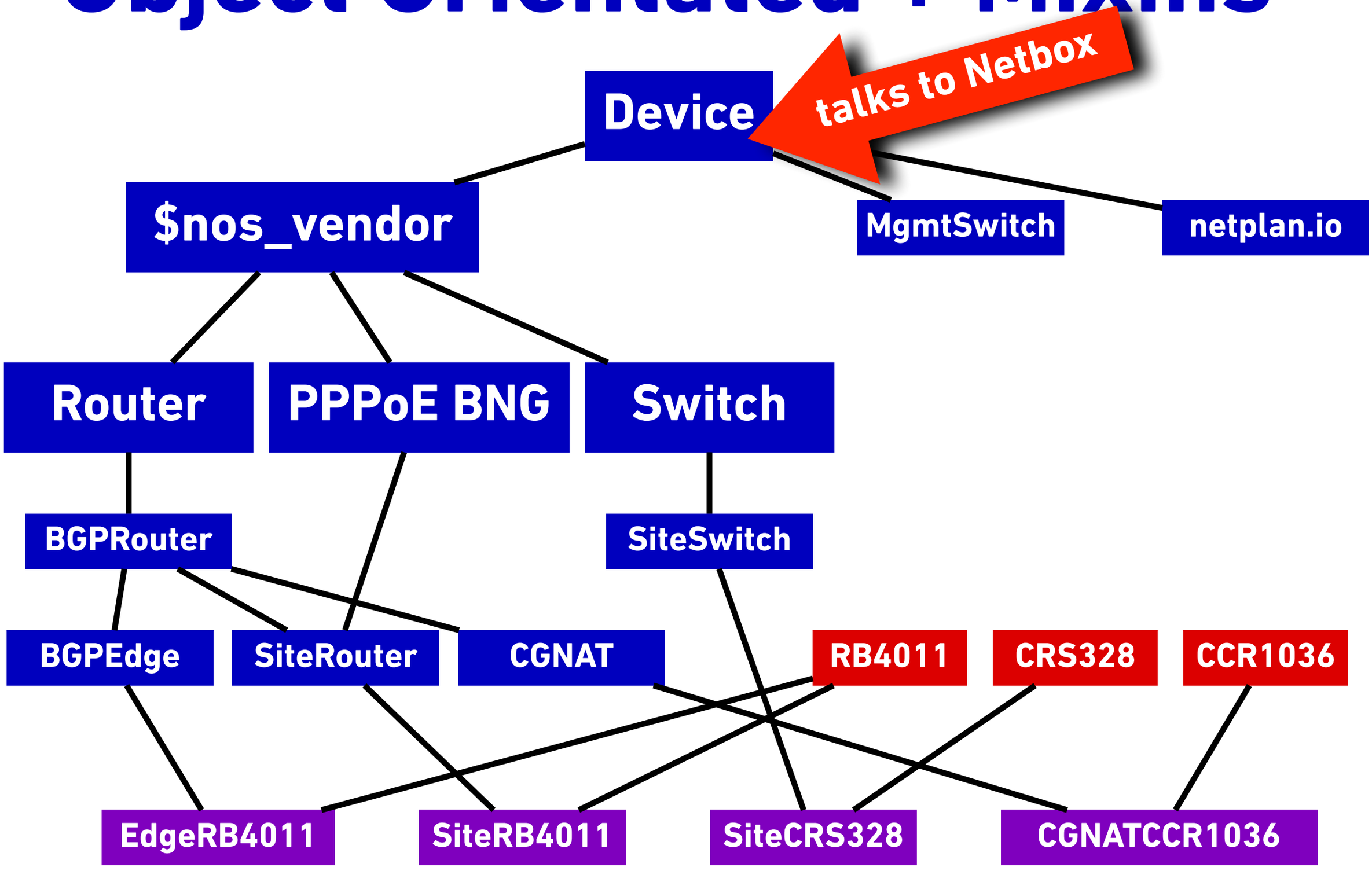

Object Orientated + Mixins

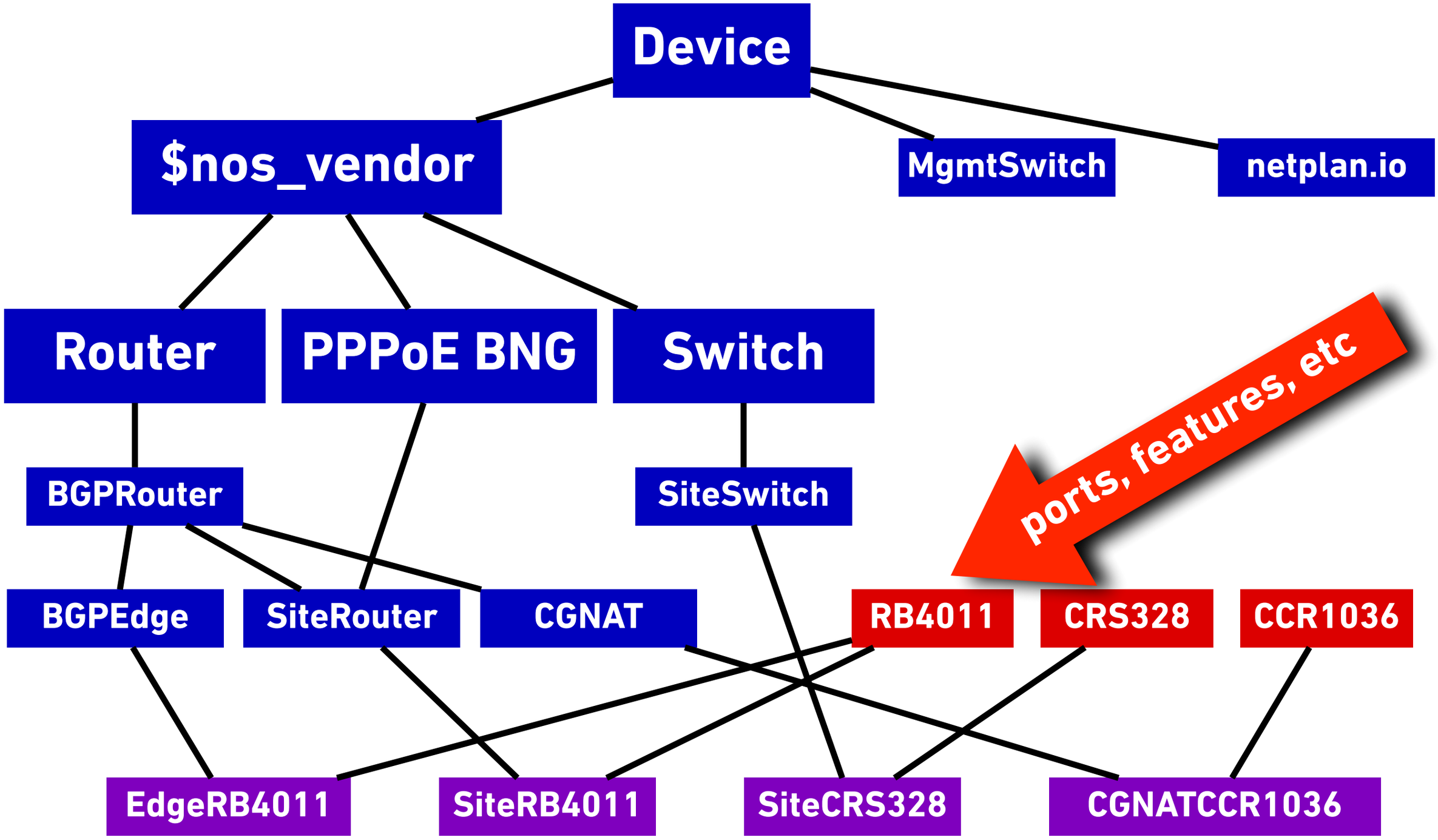

Object Orientated + Mixins

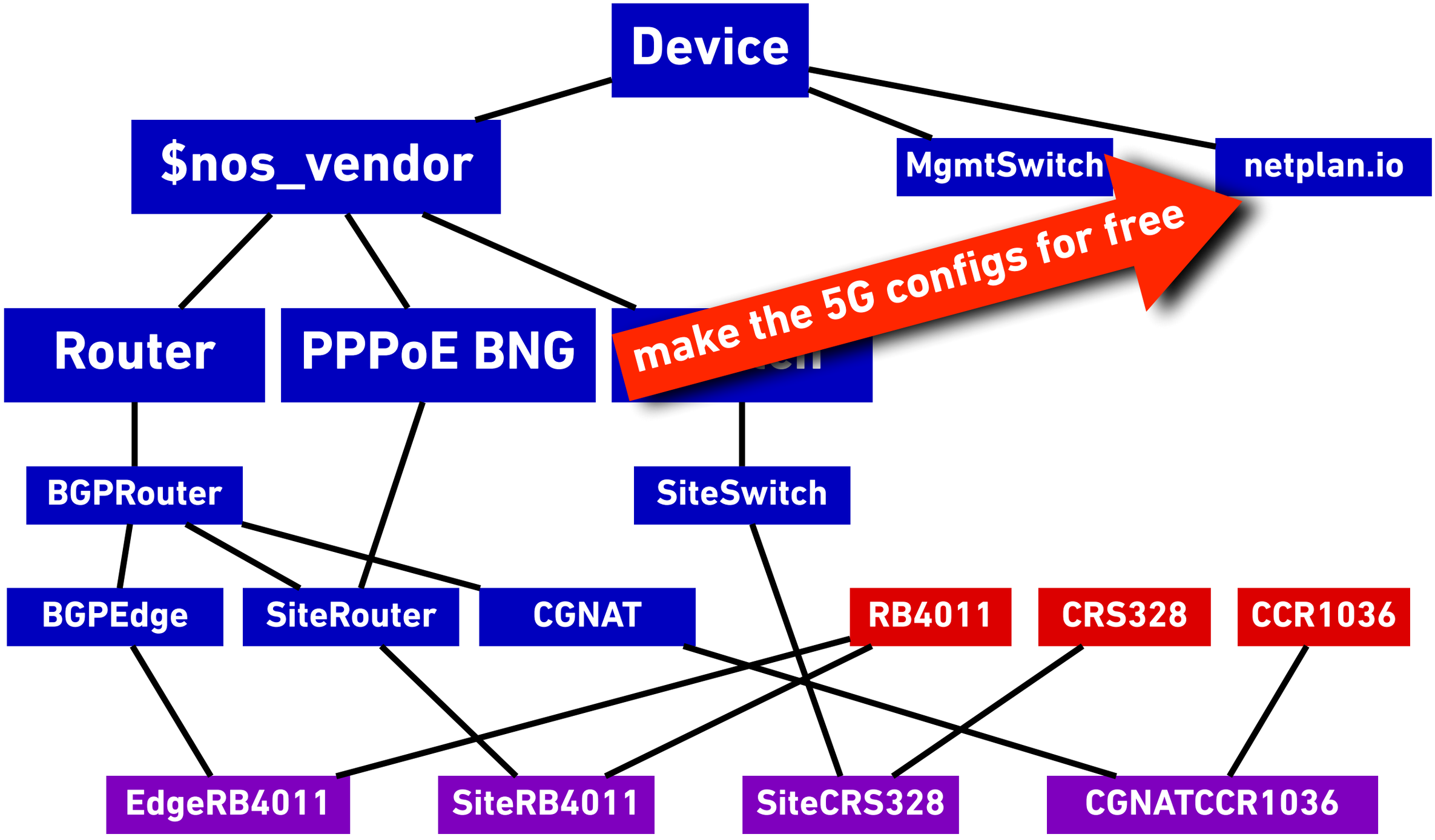

Object Orientated + Mixins

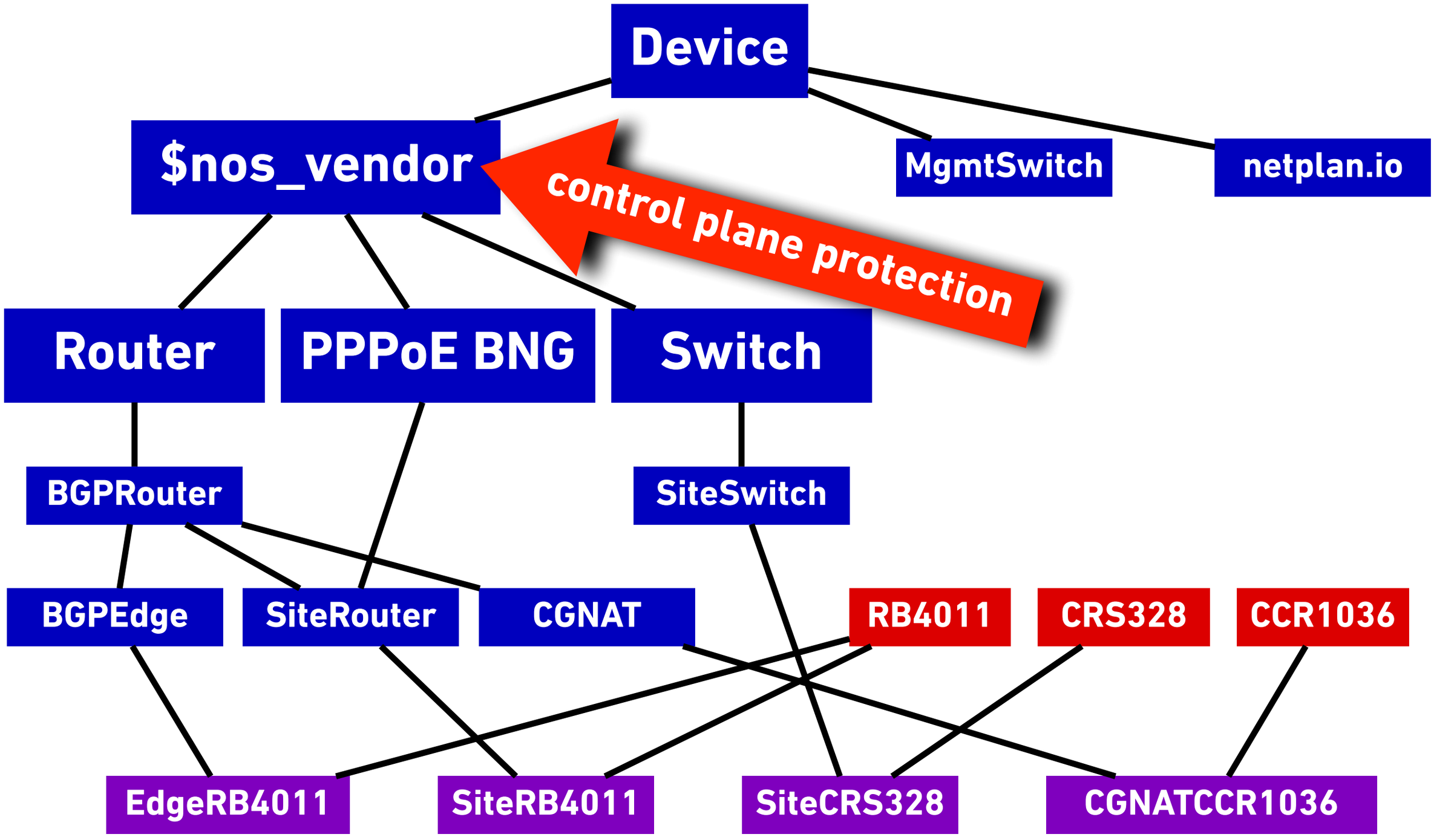

Object Orientated + Mixins

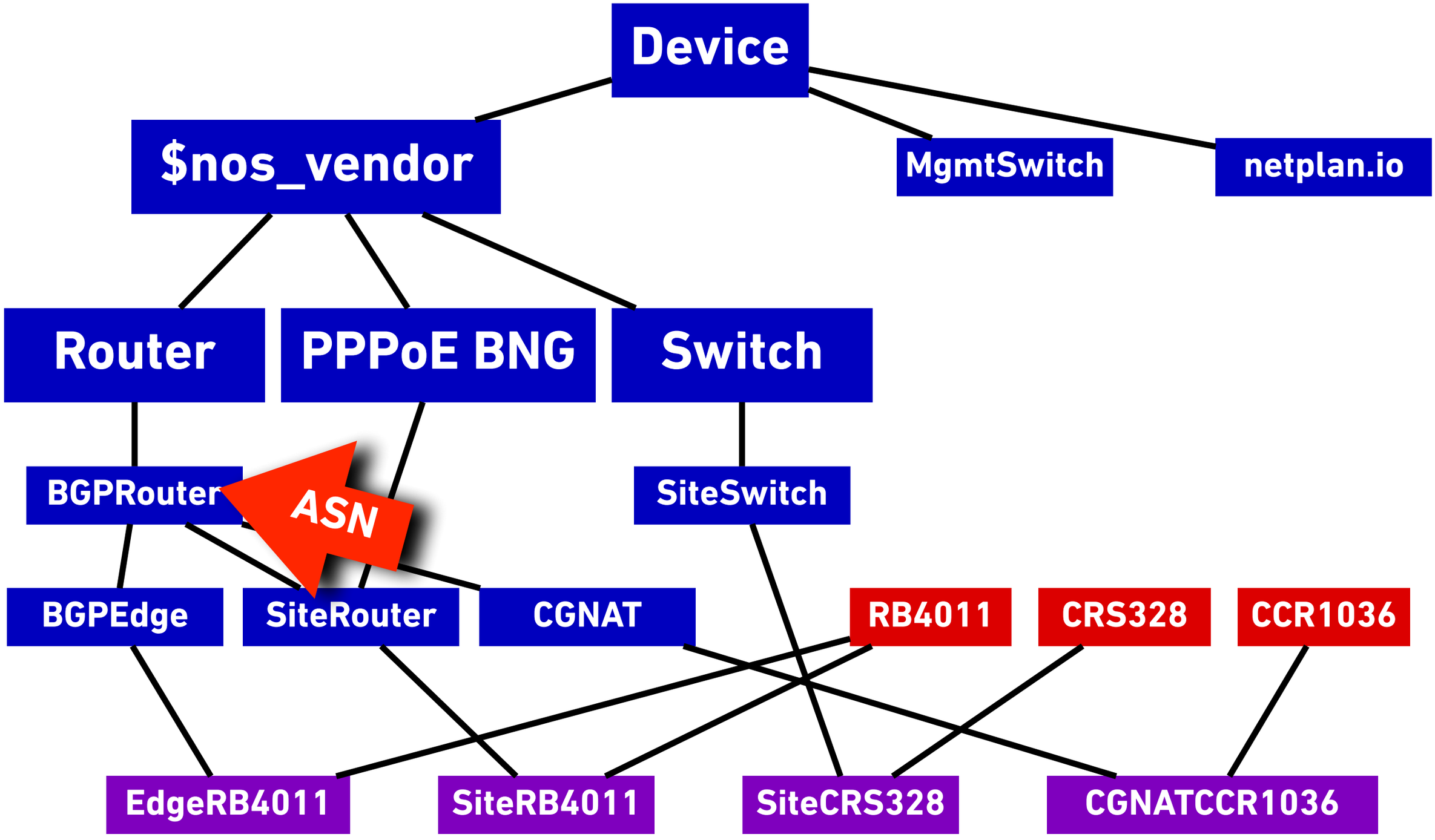

Object Orientated + Mixins

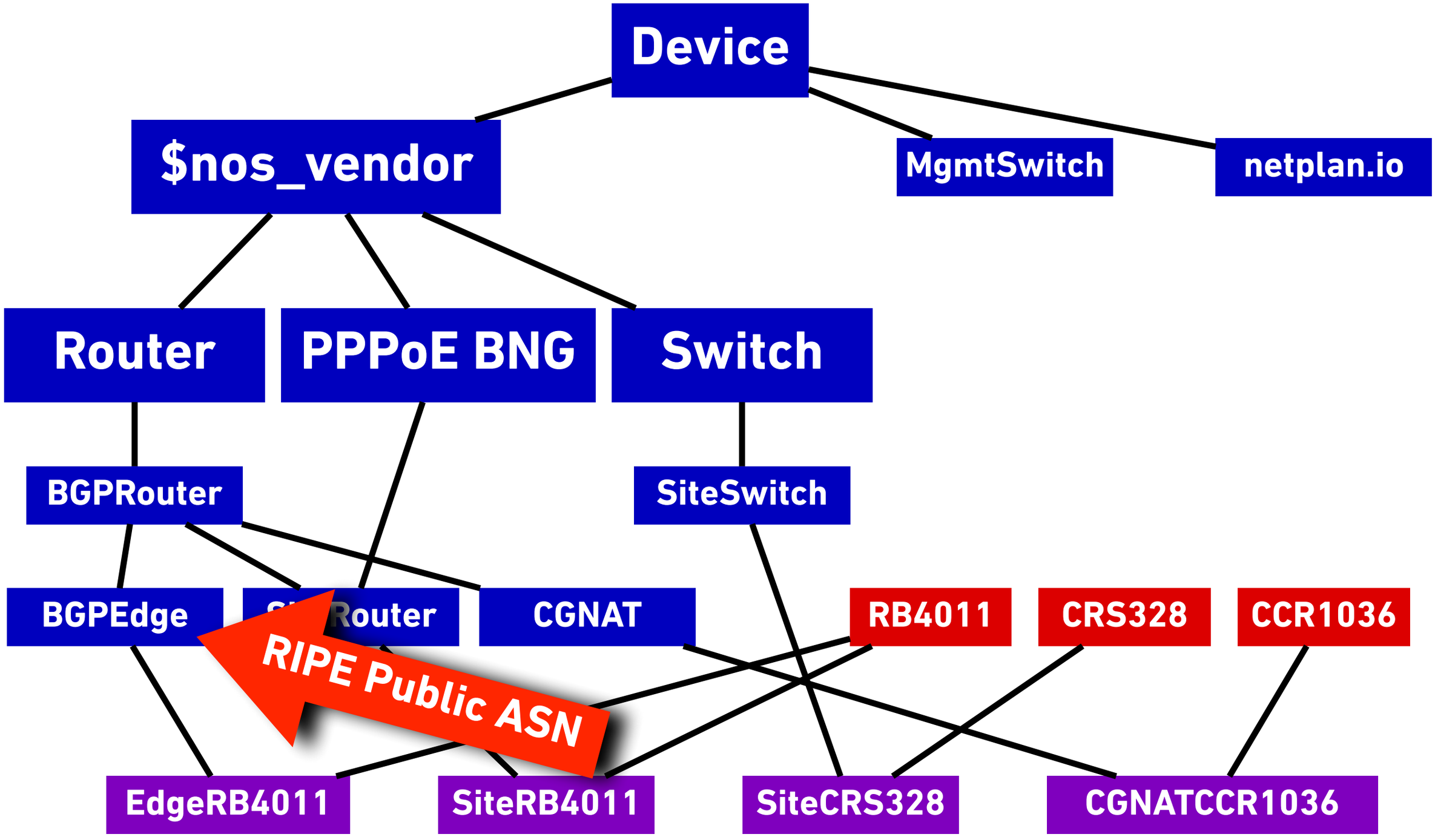

Object Orientated + Mixins

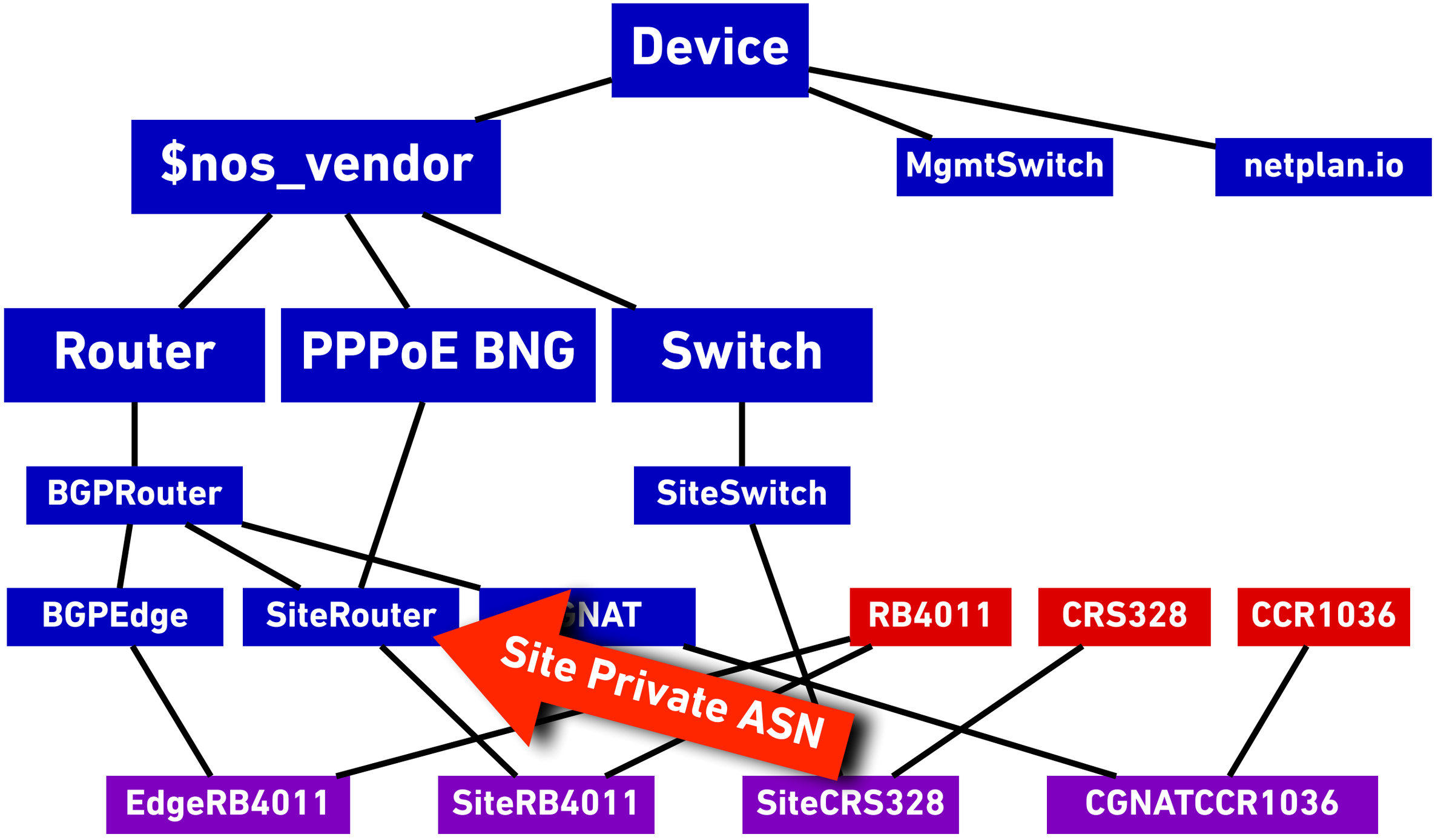

Object Orientated + Mixins

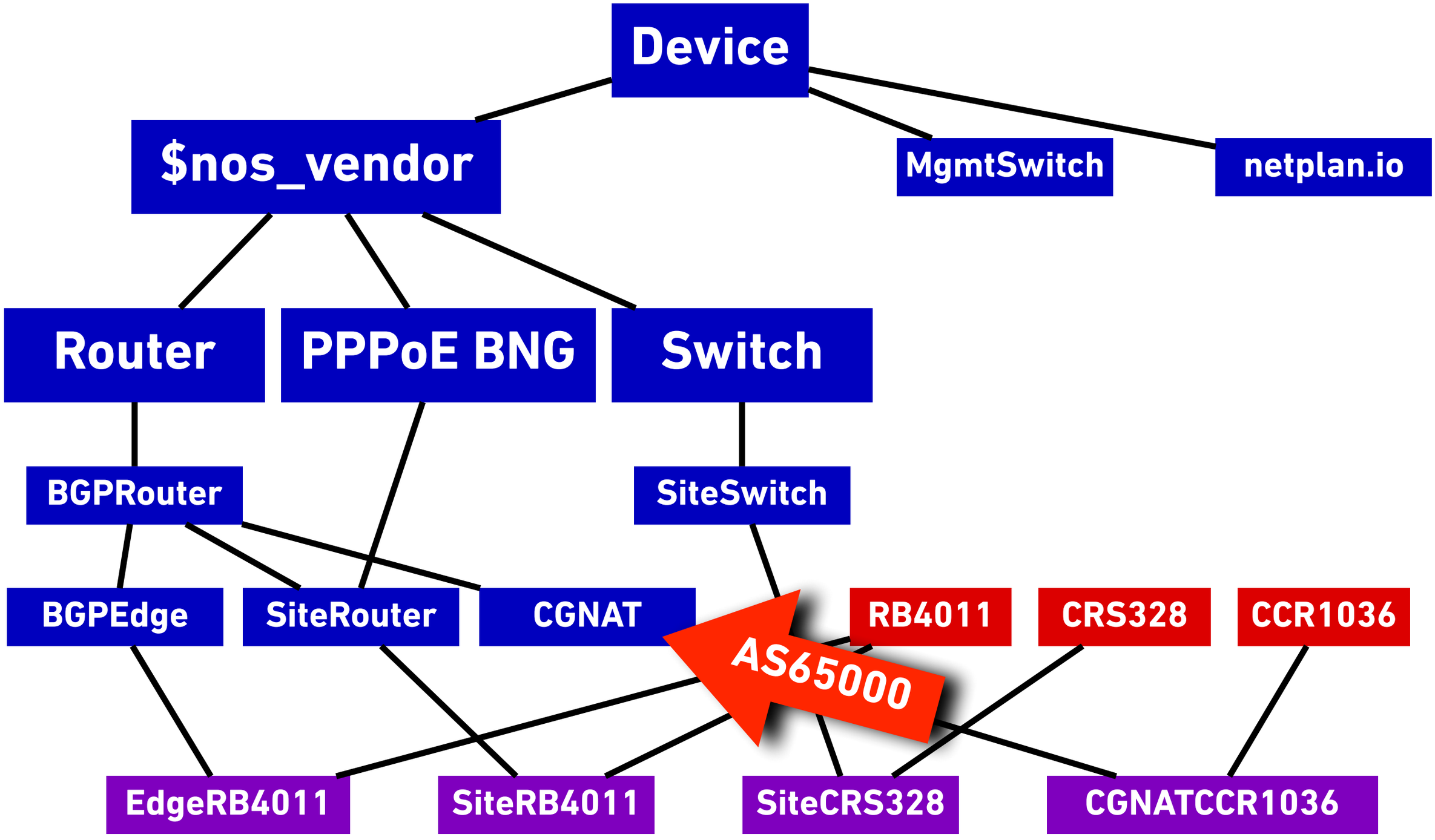

Object Orientated + Mixins

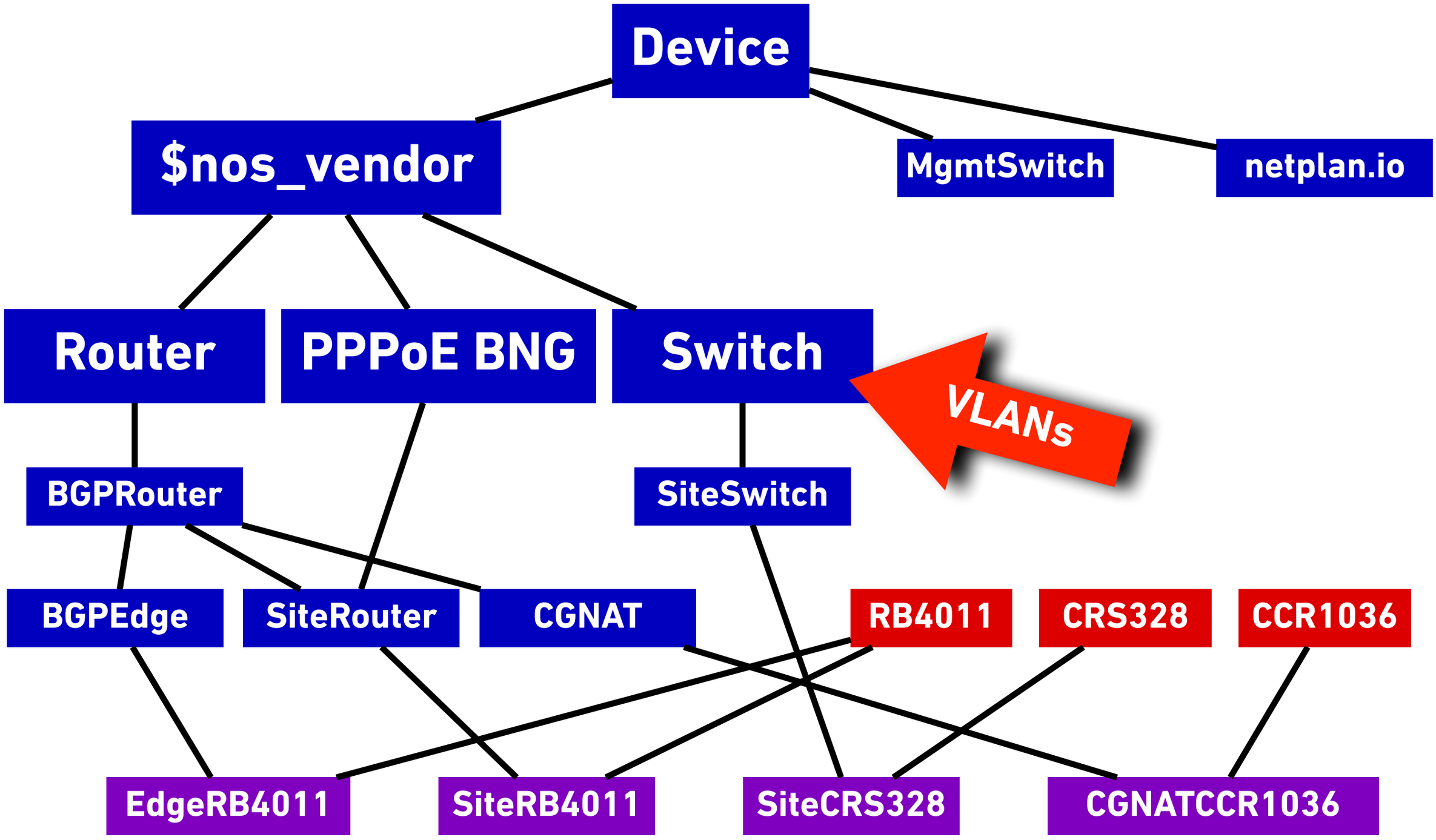

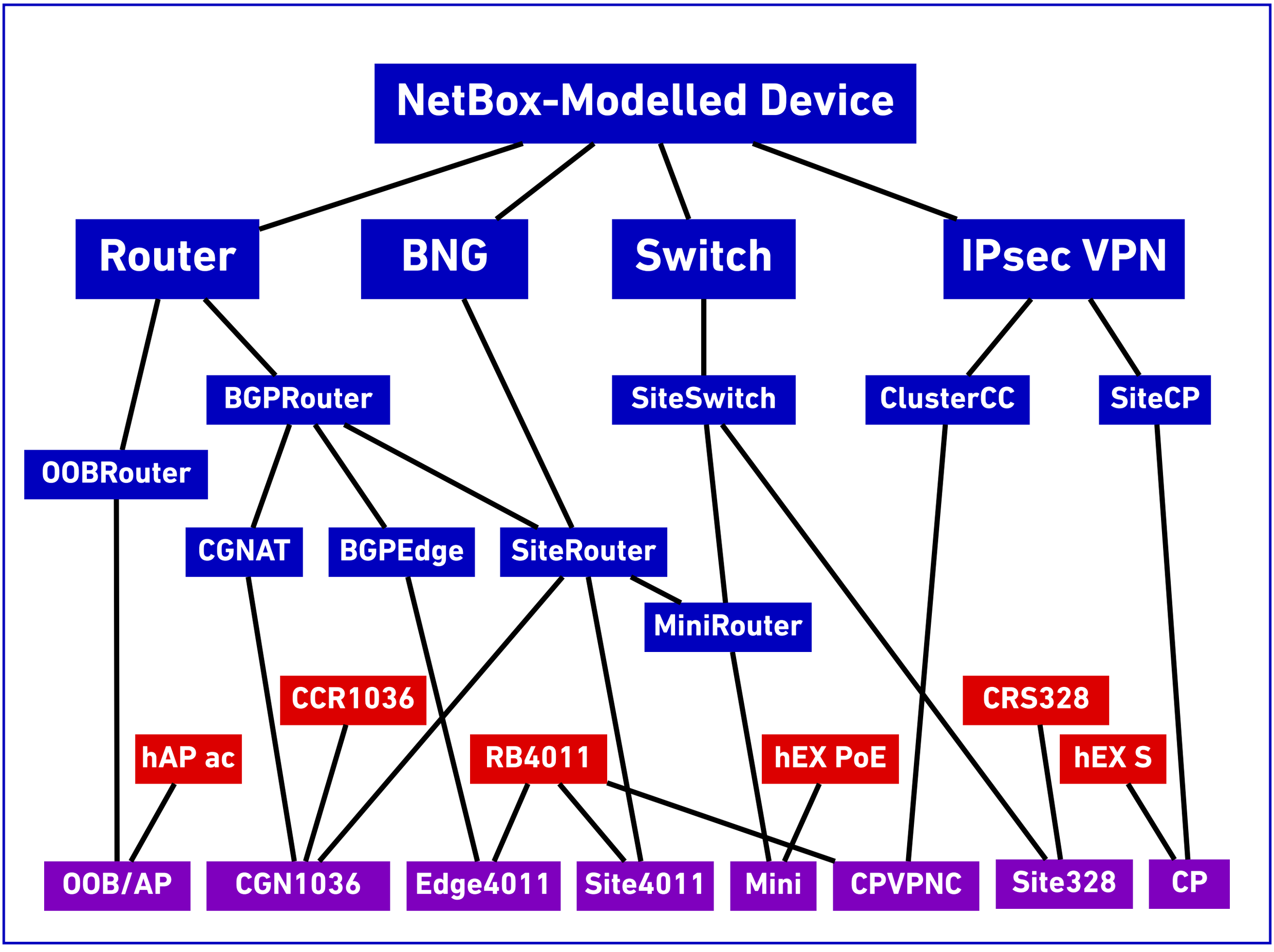
NetBox-Modelled Device
Router
BNG
Switch
IPsec VPN
BGPRouter
SiteSwitch
ClusterCC
SiteCP
OOBRouter
CGNAT
BGPEdge
SiteRouter
MiniRouter
CCR1036
CRS328
hAP ac
RB4011
hEX PoE
hEX S
OOB/AP
CGN1036
Edge4011
Site4011
Mini
CPVPNC
Site328
CP

Templating In Action

- python ./build.py
- ⌛
- ls -R configs

```
configs/cc:
cc.ayreofcara.sron.net.cloudnet.scot.conf cc.kirkbrae.west.net.cloudnet.scot.conf

configs/cgn:
cgn._future.net.cloudnet.scot.conf         cgn.keelylang.main.net.cloudnet.scot.conf  cgn.stove.main.net.cloudnet.scot.conf
cgn.ayreofcara.sron.net.cloudnet.scot.conf cgn.kirkbrae.west.net.cloudnet.scot.conf

configs/cp:
cp.ambulancestation.pwest.net.cloudnet.scot.conf cp.kirkbrae.west.net.cloudnet.scot.conf
cp.brekkaskaill.net.cloudnet.scot.conf           cp.northwalls.hoy.net.cloudnet.scot.conf
cp.clestrain.pwest.net.cloudnet.scot.conf        cp.southwalls.hoy.net.cloudnet.scot.conf
cp.flottaoil.flot.net.cloudnet.scot.conf         cp.woo.west.net.cloudnet.scot.conf

configs/edge:
edge._future.net.cloudnet.scot.conf         edge.keelylang.main.net.cloudnet.scot.conf  edge.stove.main.net.cloudnet.scot.conf
edge.ayreofcara.sron.net.cloudnet.scot.conf edge.kirkbrae.west.net.cloudnet.scot.conf
```

BUILD: A TYPICAL DAY

Grab the Gear (v1)

Dial
GW 1+
vodafone UK
Telephone
GW 1+
vodafone UK

PERIODICAL
INSPECTIONS
of this
lifeline
holder
should be

Orkney Inter Island Air Service
This is to certify that
@NETWORK MOOSE
has flown on the
World's Shortest Scheduled Air Service
between the islands of
Westray and Papa Westray
as authenticated by Guinness World Records

Get to Site

Swear

Pre-Build, Take Everything

- Some islands' ferry services are twice per week
  - Winter timetable has fewer sailings
  - Bad weather/tide cancellations; also covid
    - Can send parcels, people, vehicles
    - Don't be late for your ferry home
- Islands also served by LoganAir
  - Popular with tourists (thanks, Tom Scott)
  - Limited capacity for people and parcels

Grab the Gear v2

Connect the Network

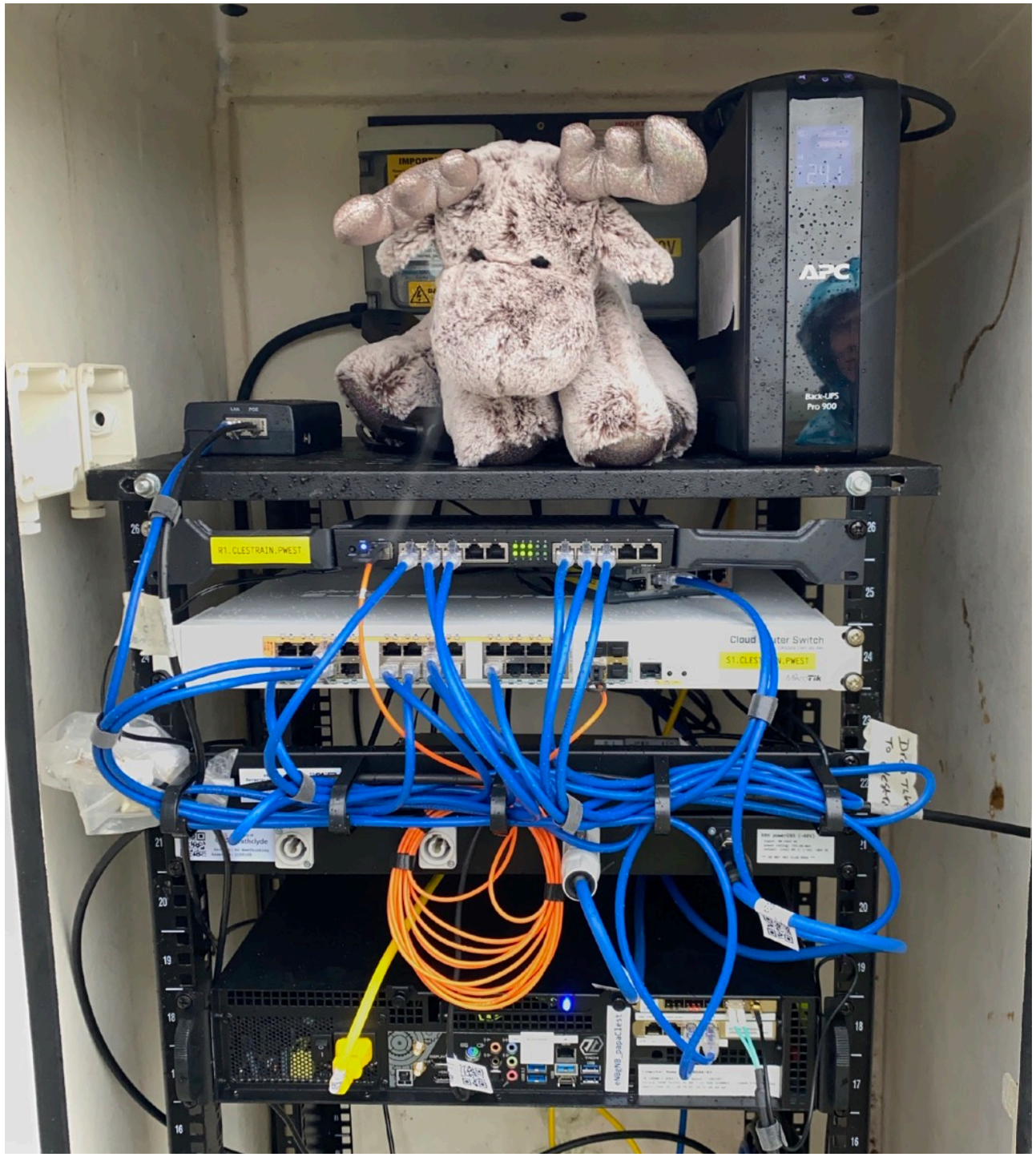

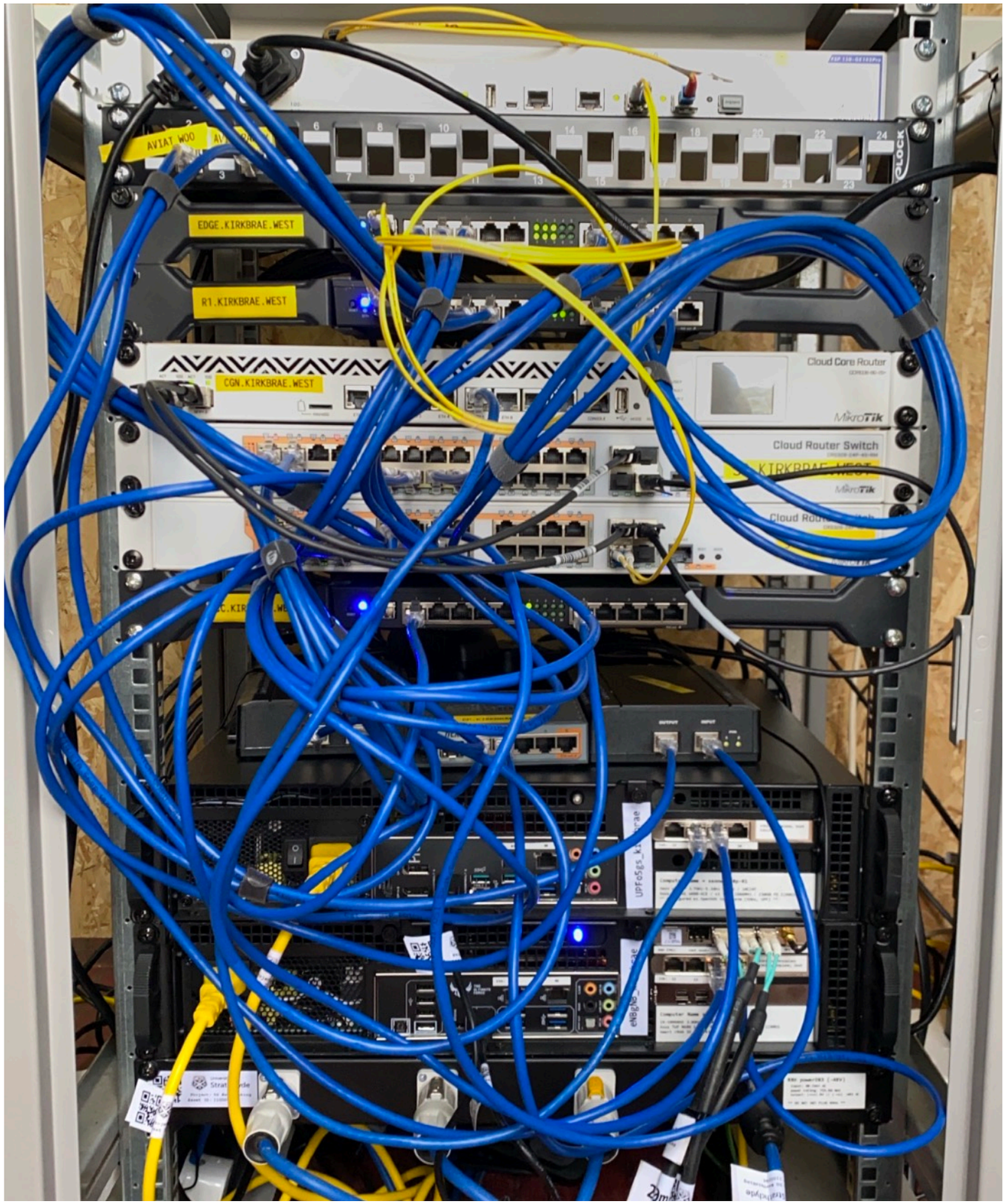

The Most Complicated POP Site

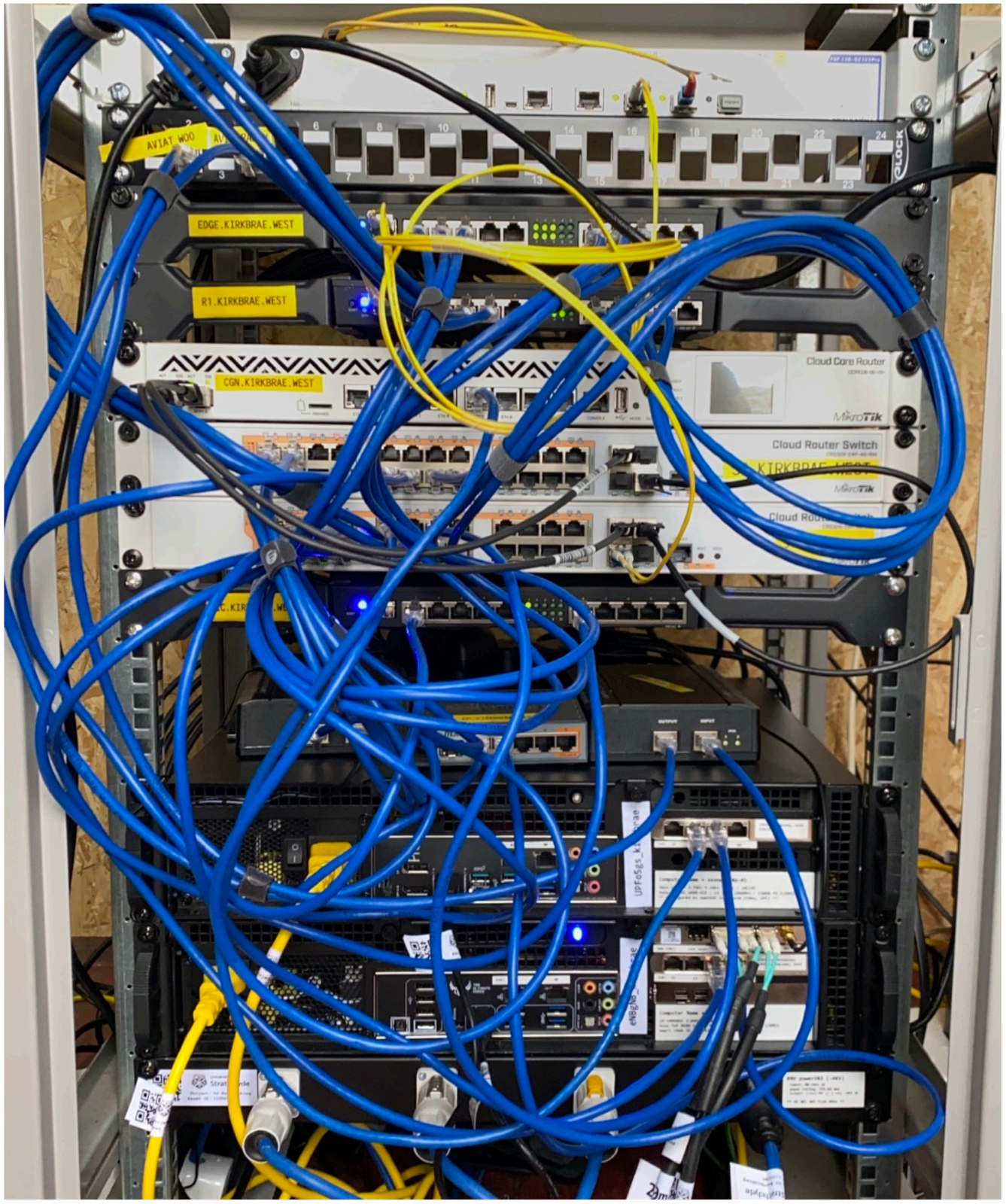

The Most Complicated POP Site

ISP: Backbone, Backhaul

The Most Complicated POP Site

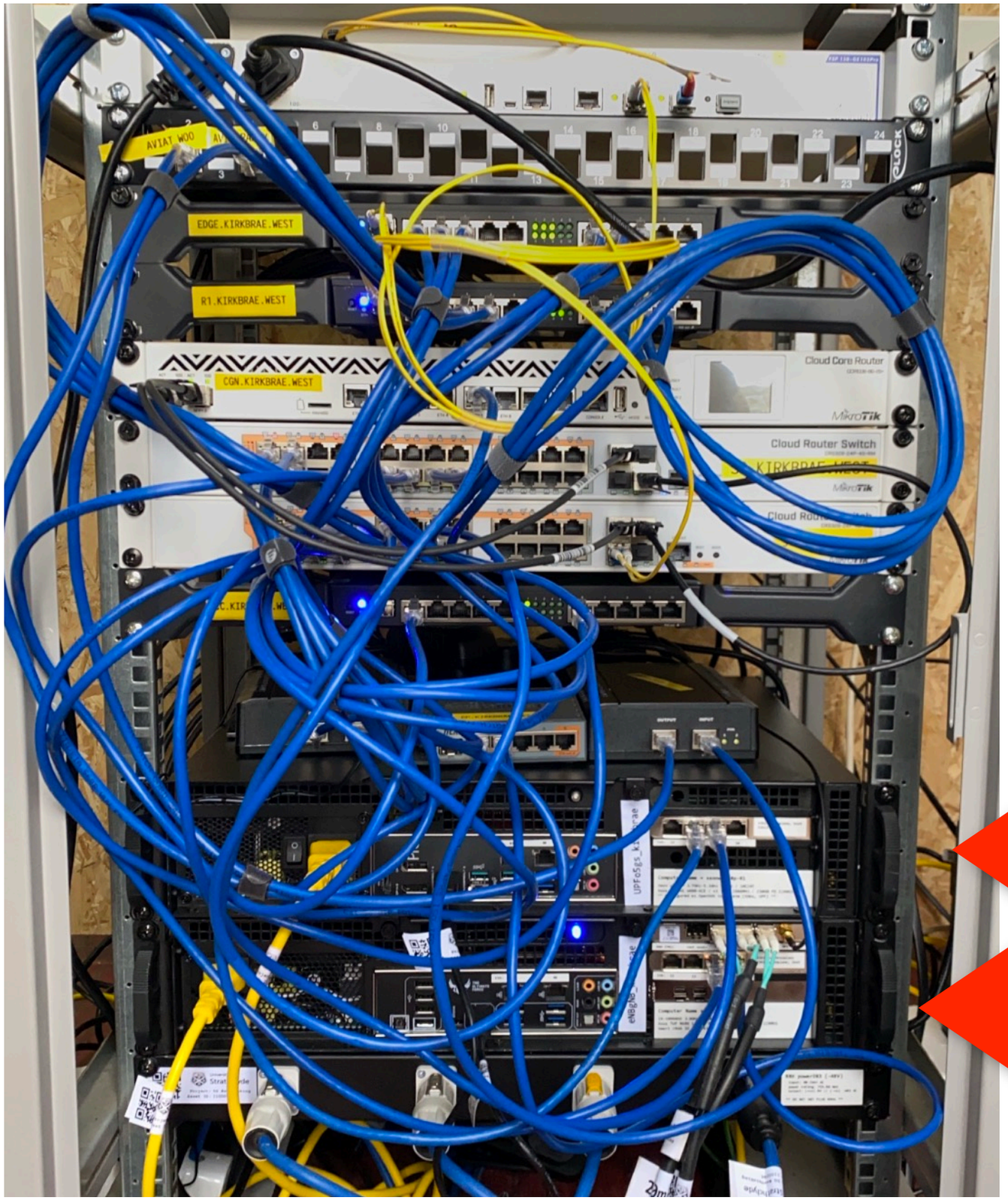

Hoist the Radios!

Aviat Point-to-Point 11GHz

Connect the CPRIs

Make 5G

- Apple won't let SIMs connect to non-encrypted networks
- Non-commercial, testbed, no ciphers, no iPhones/iPads
- iPhone has a Lightning-to-Ethernet adaptor connected to CPE/UE

Leave Site with Big Smile

5G FWA: WORTHWHILE?

Evolution of the G's

- 2G: able to make phone-calls
- 3G: mobile access to Internet
- 4G: mobile video streaming
- 5G: "Internet of Things"

— Prof. Andy Sutton, BT EE / University of Salford

Evolution of the G's

- 2G: able to make phone-calls
- 3G: mobile access to Internet
- 4G: mobile video streaming
- 5G: "Internet of Things"

This FWA project

— Prof. Andy Sutton, BT EE / University of Salford

Evolution of the G's

- 2G: able to make phone-calls
- 3G: mobile access to Internet
- 4G: mobile video streaming
- 5G: "Internet of Things"

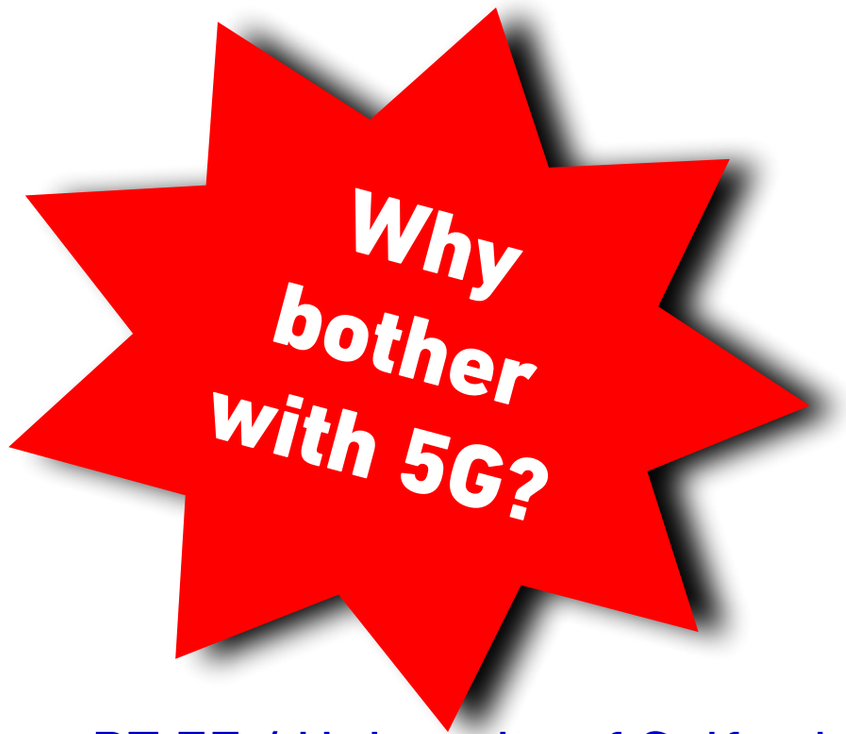

— Prof. Andy Sutton, BT EE / University of Salford

Costs of 5G

- Core (either hosted or self-operated)
- Increased capex of radios (SDR + BBU)
- Increased opex of radios (CPU/power usage)
- Increased cost of CPE compared to 5GHz FWA
- Spectrum licenses
- Big Paperwork (GSMA, national regulators, etc)

Benefits of 5G

- Mobility (only partially realised in this project)
- Neutral hosting (revenue share, maybe spectrum)
- Supports massive number of devices
  - "Build it and they will come"
- Fewer vendor interop issues than with 5GHz FWA products...? (e.g. Cambium vs Ubiquiti vs others)
  - But what channels do your UE devices support?
- Hype-cycle funding opportunities (until 6G is cool)

Future of this Project

- Was initially funded for 6 months, end of March 2022
- CloudNet continuing to operate, seeking longer-term funding for this 5G trial
  - When you bring >1Mbit/sec Internet to an area for the first time, users don't immediately have "average utilisation" (no streaming subscriptions)
  - Might transition to "traditional" FWA with 5GHz or light-licensed spectrum instead
- ...but there are MNOs in discussions, so there is hope!

Story Isn't Over...

- New network architecture is mostly deployed
  - A couple of remaining sites being migrated over
- How to apply future "patches" to configs?
  - Vendor's NOS has API; store metadata in config
  - Query, amend, update version comment/MOTD

Results

- Customer performance significantly improved
  - e.g. one customer went from 6 to 150Mbit/sec
  - (<1Mbit/sec available from $national_incumbent)
- Network manageability should be simplified
  - Customer public/CGN IP allocations from RADIUS
- Loop-free via L3 routing rather than STP
  - Improved resilience for rain/tide fade, failures

The Team

LET'S DISCUSS 5G LAST MILE

E: marek @ faelix . net
T: @faelix
W: https://faelix.net/

E: greg @ cloudnet . scot
T: @cloudnet4
W: https://www.cloudnet.scot/